CONTRACT DRAWING INDEX

TITLE	DWG NO
GENERAL INFORMATION	
COVER SHEET	
SIGNATURE SHEET	O-LEM-0/25
DRAWING INDEX AND GENERAL NOTES	O-LEM-0/26.2
PROJECT LOCATION AND VICINITY MAP	O-LEM-3/30.1
PLAN - MAIN CHANNEL LOCKS AND DAM	O-LEM-3/31
PLAN - BACK CHANNEL DAM	O-LEM-3/32
HYDROGRAPHS & DISCHARGES	
UPPER POOL HYDROGRAPHS 1995-1999, INCLUSIVE	O-LEM-14/25.1
UPPER POOL HYDROGRAPHS 2000-2004, INCLUSIVE	O-LEM-14/26.1
LOWER POOL HYDROGRAPHS 1995-1999, INCLUSIVE	O-LEM-14/27.1
LOWER POOL HYDROGRAPHS 2000-2004, INCLUSIVE	O-LEM-14/28.1
DISCHARGE DURATION AND STAGE DISCHARGE RELATIONSHIPS	O-LEM-14/29.1
EMERGENCY BULKHEADS	
GENERAL PLAN AND MEMBER FORCES	O-LEM-58/25.2
PARTIAL TRUSS PLAN 1 OF 2	O-LEM-58/26.2
PARTIAL TRUSS PLAN 2 OF 2	O-LEM-58/27.2
ELEVATIONS-PARTIAL DOWNSTREAM & UPSTREAM 1 OF 2	O-LEM-58/28.2
ELEVATIONS-PARTIAL DOWNSTREAM & UPSTREAM 2 OF 2	O-LEM-58/29.2
ELEVATIONS-END PANELS & INTERMEDIATE PANELS	O-LEM-58/30.2
PLAN & ELEVATIONS-HOUSING & ROLLERS ASSEMBLY	O-LEM-58/31.2
PLAN & ELEVATIONS-HOUSING & ROLLERS ASSEMBLY BOLT LAYOUT	O-LEM-58/32.2
SECTIONS & DETAILS-HOUSING & ROLLERS ASSEMBLY 1 OF 2	O-LEM-58/33.2
SECTIONS & DETAILS-HOUSING & ROLLERS ASSEMBLY 2 OF 2	O-LEM-58/34.2
SECTIONS & DETAILS-LIFTING ASSEMBLY	O-LEM-58/35.2
MISC. DETAILS	O-LEM-58/36.2
SECTIONS & DETAILS-GUIDE BEAM	O-LEM-58/37.2
SECTIONS & DETAILS-FRAMING CONNECTIONS 1 OF 5	O-LEM-58/38.2
SECTIONS & DETAILS-FRAMING CONNECTIONS 2 OF 5	O-LEM-58/39.2
SECTIONS & DETAILS-FRAMING CONNECTIONS 3 OF 5	O-LEM-58/40.2
SECTIONS & DETAILS-FRAMING CONNECTIONS 4 OF 5	O-LEM-58/41.2
SECTIONS & DETAILS-FRAMING CONNECTIONS 5 OF 5	O-LEM-58/42.2
SECTIONS & DETAILS-SPLICE PLATES	O-LEM-58/43.2

B

GENERAL NOTES

GOVERNING CODES

ALUMINUM DESIGN MANUAL, 2000 EDITION, THE ALUMINUM ASSOCIATION

EM 1110-2-2105, ENGINEERING AND DESIGN - DESIGN OF HYDRAULIC STEEL STRUCTURES, CHANGE 1, 31 MAY 1994.

EM 1110-2-2611, ENGINEERING AND DESIGN - ENGINEERING FOR PREFABRICATED CONSTRUCTION OF NAVIGATION PROJECTS, 1 FEBRUARY 04.

ER 1110-2-1150, ENGINEERING AND DESIGN - ENGINEERING AND DESIGN FOR CIVIL WORKS PROJECTS, U. S. ARMY CORPS OF ENGINEERS, DEPARTMENT OF THE ARMY, 31 AUGUST 1999.

ER 1110-2-1200, ENGINEERING AND DESIGN - PLANS AND SPECIFICATIONS FOR CIVIL WORKS PROJECTS, 30 OCTOBER 1993

A B

INTENT OF GENERAL NOTES

THE INTENT OF THESE GENERAL NOTES IS TO DEFINE DESIGN PARAMETERS (LOADS AND ALLOWABLE STRESSES) FOR ALL STRUCTURES AND MATERIALS USED. SPECIFICATIONS CONCERNING MATERIALS AND INSTALLATION ARE A PART OF THIS CONTRACT AND ARE CONTAINED ELSEWHERE.

DESIGN

THE STRUCTURES ARE DESIGNED TO BE STABLE AND SELF-SUPPORTING WHEN ERECTED AND FULLY COMPLETED. IT IS THE RESPONSIBILITY OF THE CONTRACTOR TO DETERMINE THE ERECTION PROCEDURE, INCLUDING SEQUENCE OF CONSTRUCTION, AND TO INSURE THE SAFETY OF THE STRUCTURES DURING THE CONSTRUCTON PHASE, INCLUDING THE DESIGN AND SAFETY OF ANY TEMPORARY BRACING OR OTHER MEASURES WHICH MAY BE NECESSARY TO FACILITATE AND COMPLETE CONSTRUCTION.

☒ -DIMENSIONS NOTED IN THIS MANNER ARE THE RESPONSIBILITY OF THE CONTRACTOR AND SHALL BE OBTAINED PRIOR TO SUBMISSION OF ANY SUBMITTALS FOR REVIEW...
DIMENSIONS RESULTING FROM EQUIPMENT SHALL BE OBTAINED FROM THE EQUIPMENT MANUFACTURER'S APPROVED SHOP DRAWINGS.

DIMENSIONS PERTAINING TO EXISTING CONSTRUCTION SHALL BE VERIFIED IN THE FIELD.

DESIGN LOADS AND CONDITIONS

DEAD LOADS
SELF-WEIGHT OF STRUCTURE

HYDROSTATIC LOADS
DENSITY OF WATER=62.5 PCF
WATER ELEVATION=710.00

ICE FLOW LOADS
2.2 KLF-LATERAL LOAD @ TOP CHORD OF TOP BULKHEAD

ICE BUILD-UP LOADS
ICE DENSITY=56 PCF
1" ICE BUILD-UP SURROUNDING ALL FRAMING MEMBERS @ TOP CHORD OF TOP BULKHEAD

HOIST LOADS
HOIST RATED CAPACITY=20 TONS
@ EACH LIFT POINT=10 TONS
WITH BULKHEAD BOUND IN GUIDE SLOTS

HOIST OVERLOAD
36 TONS TOTAL
@ EACH LIFT POINT=18 TONS
WITH BULKHEAD BOUND IN GUIDE SLOTS

VESSEL IMPACT LOADS
NOT CONSIDERED

LIVE LOADS (VERTICAL)
NOT CONSIDERED

SNOW LOADS
NOT CONSIDERED

SEISMIC LOADS
NOT CONSIDERED

COORDINATION OF WORK

MECHANICAL ROLLERS & FRAMING, OPENINGS, AND SUPPORTS FOR EQUIPMENT ARE SHOWN FOR BIDDING PURPOSES ONLY. THE EXACT SIZE AND LOCATION OF SUCH ITEMS SHALL BE VERIFIED FROM THE MANUFACTURER'S APPROVED SHOP DRAWINGS.

STRUCTURAL ALUMINUM

DESIGN DATA

SPECIFICATIONS	-ALUMINUM DESIGN MANUAL, 2000 "SPECIFICATIONS FOR ALUMINUM STRUCTURES"
STRUCTURAL SHAPES	-ALLOY 6061-T6 (ASTM B 308/B 308M)
PLATES	-ALLOY 6061-T6 (ASTM B 209)
BOLTS	-ALLOY 7075-T73 (ASTM F 468Z)
NUTS	-ALLOY 6262-T9 OR 6061-T6 (ASTM F467)
WASHERS	-ALLOY ALCLAD 2024-T4
WELDING	-AWS D1.2 STRUCTURAL WELDING CODE-ALUMINUM

ALLOWABLE STRESSES

0.25 REDUCTION PER EM 1110-2-2105 EXCEPT FOR RATED HOIST LOAD AND HOIST OVERLOAD

4/3 STRESS INCREASE FOR HOIST OVERLOAD LOAD CASE

FACTORS OF SAFETY
nu-1.95
ny-1.65
na-1.60

6061-T6 (EXTRUSIONS)
Ftu=38 KSI
Fty=35 KSI
Fcy=35 KSI
Fsu=24 KSI
Fsy=20 KSI

STAINLESS STEEL

DESIGN DATA

SPECIFICATIONS	-ANSI/ASCE-8 "SPECIFICATION FOR THE DESIGN OF COLD-FORMED STAINLESS STEEL STRUCTURAL MEMBERS"
STRUCTURAL SHAPES	-AISI 304 (ASTM A 276) (UNS S30400)
PLATE	-AISI 304 (ASTM A 240/A 240M) (UNS S30400)
PINS & AXLES	-ASTM A 276 (UNS S21800 CONDITION A)
ROLLERS	-ASTM A 564/A 564M (UNS S17400 OR S45000 AGE HARDENED)
BOLTS	-ASTM F593G OR F593H, ALLOY GROUP 2
NUTS	-ASTM F594G OR F594H, ALLOY GROUP 2
WASHERS	-ASTM A240, TYPE 316
WELDING	-AWS D1.6 STRUCTURAL WELDING CODE-STAINLESS STEEL

TIMBER

TIMBER SHAPES	SOUTHERN YELLOW PINE CONSTRUCTION GRADE OR BETTER PRESSURE TREATED WITH COPPER AZOLE - TYPE B (CA-B) WITH 0.40 LBS/CUBIC FOOT OF RETENTION IN CONFORMANCE WITH AWPA.

US Army Corps of Engineers
Pittsburgh District

This document was originally issued by David A. Brittain on 15 July 2005. This document is not considered a sealed document. An original hardcopy signed and sealed document is on file with the U.S. Army Corps of Engineers, Pittsburgh District.

Submitted by: /s/ David A. Brittain, SECTION CHIEF
IFB NO.: W911WN-05-B-0002
Sheet 3 of 30

Design by: CVP
Dwn by: JAH
Ckd by: CDS
Submission Date: 17 JUNE 05
Revision Date:

DLZ
6121 Huntley Road, Columbus, Ohio 43229
User: 7177
Date: 7/14/2005
Plot Scale: AS SHOWN
Pen Table: 291061.tbl
Color Table color.tbl

Symbol	Description	Date	Appr.
B	ADD GENERAL NOTES, CONTRACT DRAWING INDEX UPDATE.	15 JUL 05	DAB
A	CONTRACT DRAWING INDEX UPDATED.	17 JUN 05	DAB

M:\proj\0421\1501.13\dgn\General\OLEM_G-0026b.s01

OHIO RIVER
EMSWORTH DAMS
FABRICATION OF EMERGENCY BULKHEADS
GENERAL INFORMATION
DRAWING INDEX AND
GENERAL NOTES

Drawing Number:
O-LEM-0/26.2

NOTES:
1. ALL STAINLESS STEEL AND ALUMINUM BOLTS TO BE INSTALLED IN STANDARD DIAMETER BOLT HOLES.
2. ALL MEMBERS, PLATES AND FRAMING TO BE ALUMINUM UNLESS NOTED OTHERWISE (UNO).
3. ALL GUSSET PLATES SHALL BE 1/2" THICK UNO.
4. ALL BOLTS SHALL BE 3/4" DIAMETER 7075-T73 ALUMINUM UNO W/ALUMINUM WASHER UNDER NUT.
5. ALUMINUM BOLTS SHALL BE TIGHTENED TO PRODUCE A SNUG TIGHT CONDITION, UNLESS NOTED OTHERWISE. STAINLESS STEEL BOLTS SHALL BE TIGHTENED TO THE TORQUE SHOWN IN THE TABLE ON THIS SHEET AND THEN HAVE NUT TACK WELDED TO BOLT, UNLESS OTHERWISE NOTED. (B) (A)
6. PROVIDE SOLID PRESSURE TREATED TIMBER BLOCKING 2'-0" LONG MINIMUM FOR SUPPORT AT BULKHEAD UPSTREAM AND DOWNSTREAM PANEL POINTS IN STORAGE PIT AREA AT MAIN CHANNEL AND BACK CHANNEL.

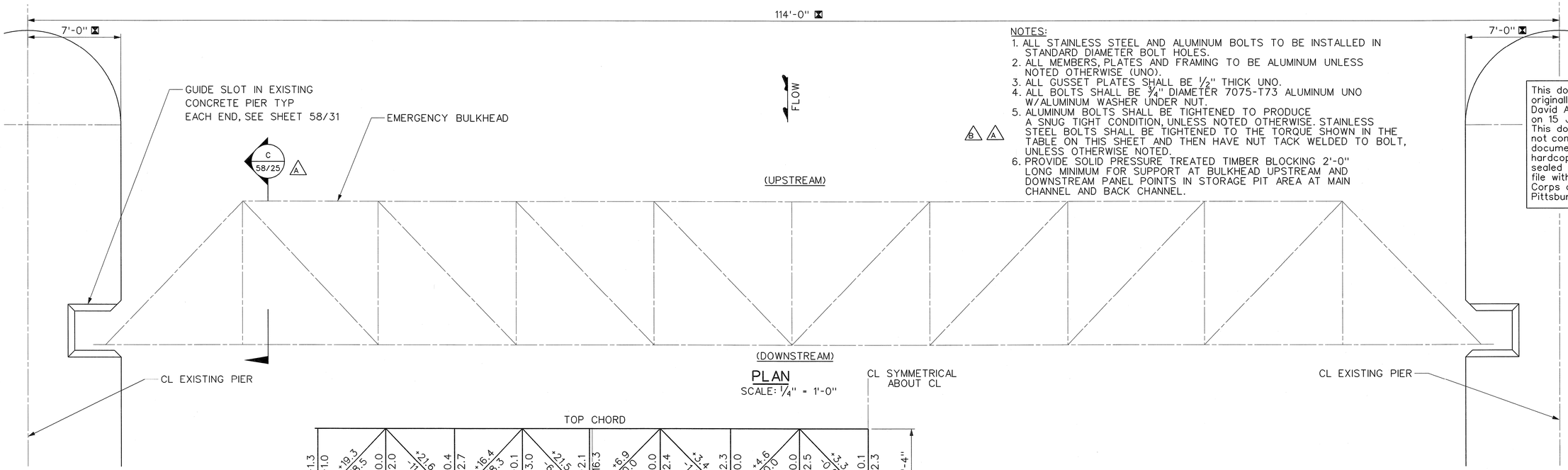

PLAN
SCALE: 1/4" = 1'-0"

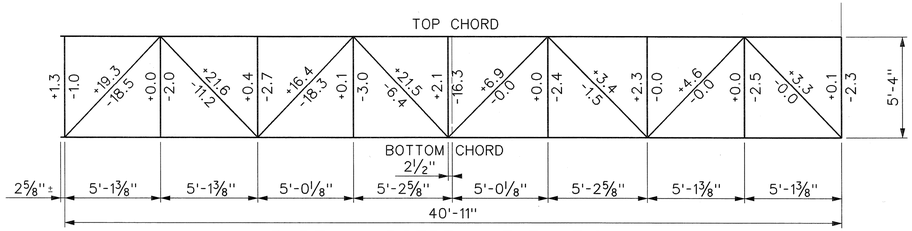

PARTIAL UPSTREAM ELEVATION (B)
SCALE: 1/4" = 1'-0"

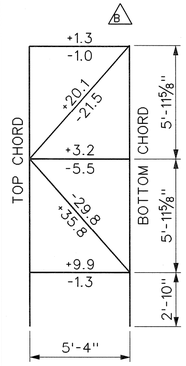

SECTION (A 58/25) (A)
SCALE: 1/4" = 1'-0"

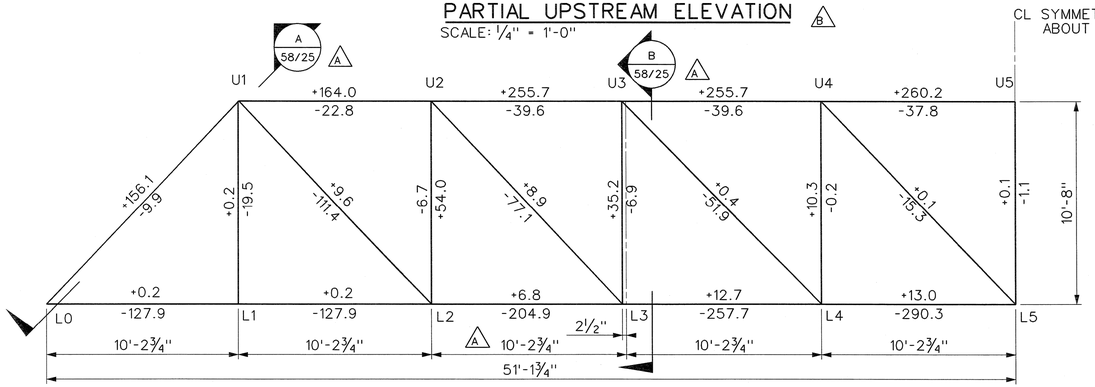

PARTIAL PLAN
SCALE: 1/4" = 1'-0"

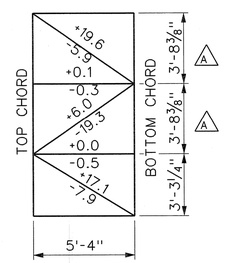

SECTION (B 58/25) (A) (B)
SCALE: 1/4" = 1'-0"

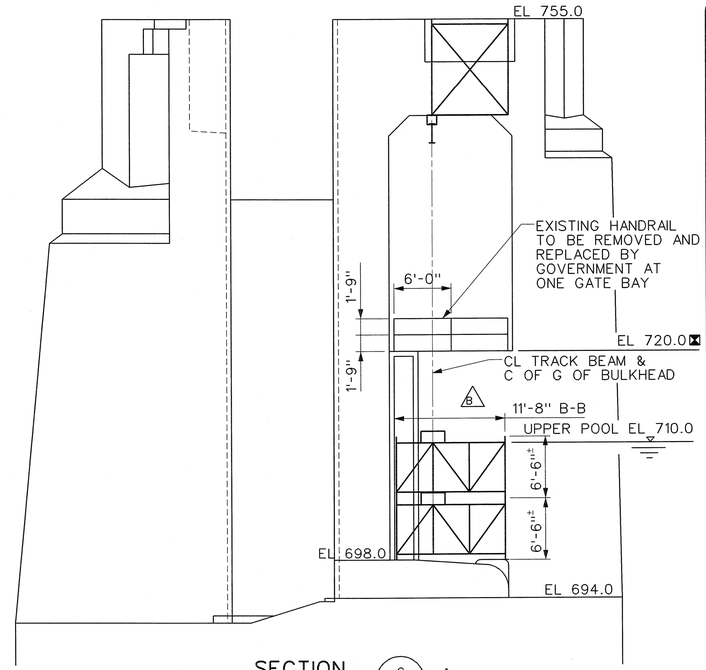

SECTION (C 58/25) (A)
SCALE: 1/8" = 1'-0"

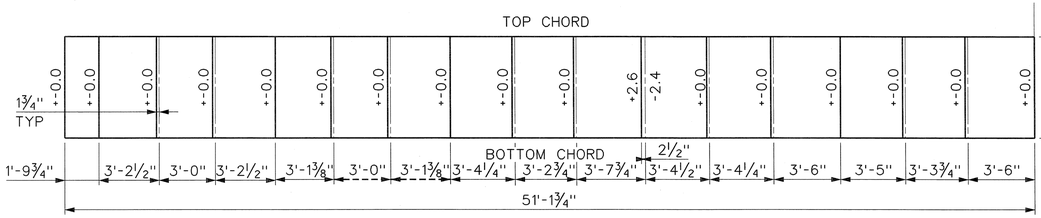

PARTIAL DOWNSTREAM ELEVATION (A) (B) (A)
SCALE: 1/4" = 1'-0"

MEMBER FORCES - ENVELOPE

NOTES:
1. TENSION = -
2. COMPRESSION = +
3. ALL FORCES IN KIPS

NOTES:
- FOUR (4) BULKHEADS TO BE PROVIDED.
- TWO (2), TO BE INSTALLED AND REMAIN AT THE MAIN CHANNEL.
- TWO (2), TO BE INSTALLED AT THE MAIN CHANNEL AND AFTER ACCEPTANCE BY THE GOVERNMENT SHALL BE DELIVERED VIA BARGE TO THE PITTSBURGH ENGINEERING WAREHOUSE AND REPAIR STATION (PEWARS).

SS BOLT DIA.	TORQUE
3/4"	1200 in-lbf
1"	2800 in-lbf UNLESS OTHERWISE NOTED

(B)

8' 4' 0 8'
SCALE: 1/8" = 1'-0"

4' 2' 0 4'
SCALE: 1/4" = 1'-0"

This document was originally issued by David A. Brittain on 15 July 2005. This document is not considered a sealed document. An original hardcopy signed and sealed document is on file with the U.S. Army Corps of Engineers, Pittsburgh District.

US Army Corps of Engineers Pittsburgh District

Submitted by: /s/ David A. Brittain, SECTION CHIEF
IFB NO.: W911WN-05-B-0002
Sheet 12 of 30

Design by: CVP
Dwn by: JAH
Ckd by: CDS
Submission Date: 17 JUNE 05
Revision Date:

DLZ
6121 Huntley Road, Columbus, Ohio 43229
User: DLZ
Date: 7/14/2005
Plot Scale: AS SHOWN
Pen Table: 2911061.tbl
Color Table color.tbl

Symbol	Description	Date	Appr.
B	REVISED ALUMINUM AND STAINLESS STEEL BOLTS.	15 JUL 05	DAB
	CLARIFIED LOADS.		
A	DOWNSTREAM ELEVATION & SECTION B-MEMBER POSITIONING REVISED. SECTION REFERENCES REVISED.	17 JUN 05	DAB
	NOTES REVISED.		

M:\proj\0421\1501.13\dgn\Structural\OLEM_S-5825b.s01

OHIO RIVER
EMSWORTH DAMS
FABRICATION OF EMERGENCY BULKHEADS
EMERGENCY BULKHEADS
GENERAL PLAN AND MEMBER FORCES

Drawing Number: O-LEM-58/25.2

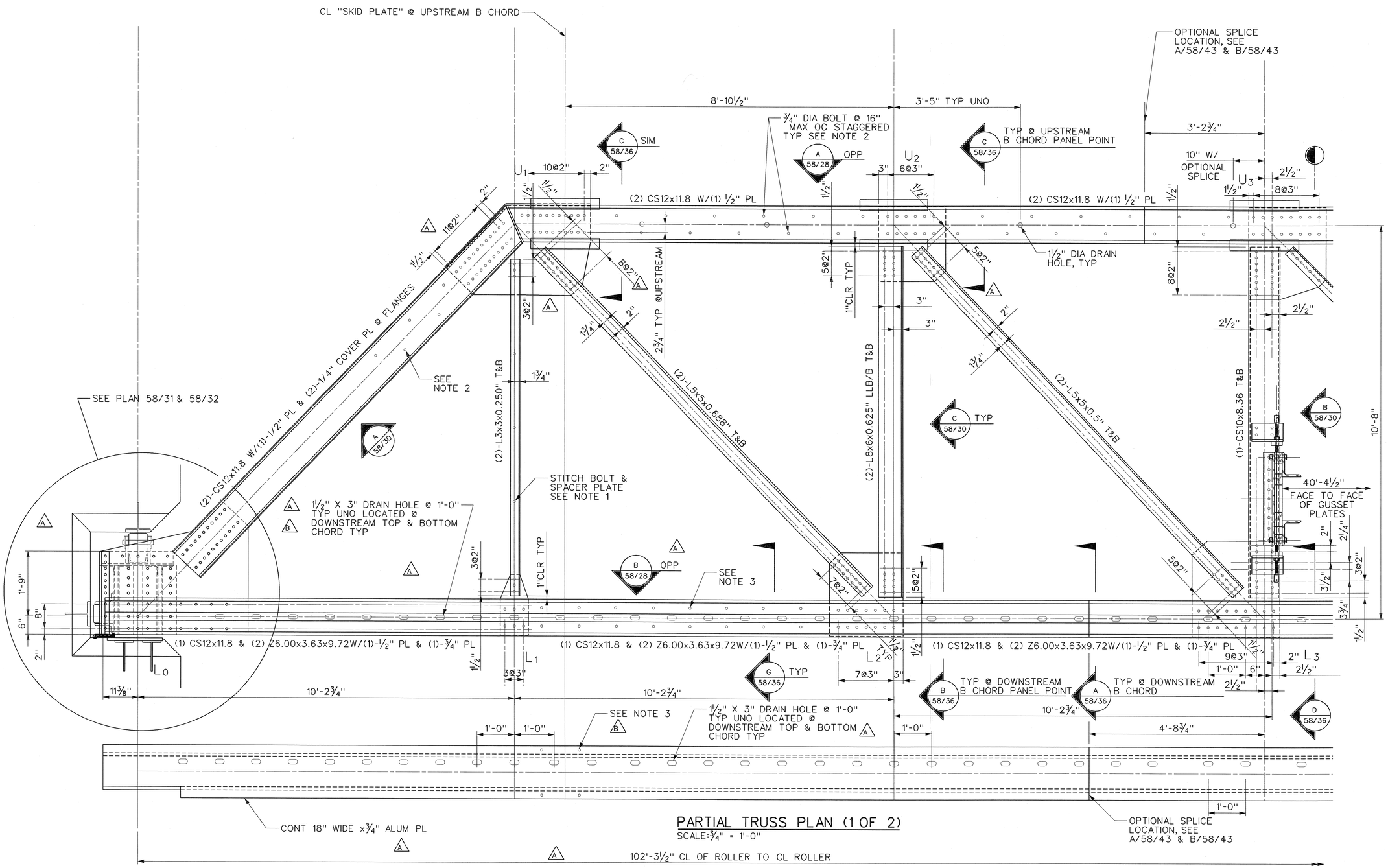

PARTIAL TRUSS PLAN (1 OF 2)

SCALE: ¾" = 1'-0"

NOTES:

1. PROVIDE ¾" DIA BOLT AND ½" SPACER PLATE AT ¼" POINTS ON ALL WEB HORIZONTAL MEMBERS, TYP.
2. (A) PROVIDE 2 ROWS ¾" DIA BOLTS @ 16" MAX OC STAGGERED. TYP AT ALL UPSTREAM & END CHORD MEMBERS.
3. (A) PROVIDE 2 ROWS ¾" DIA BOLTS @ 12" MAX OC. TYP AT ALL DOWNSTREAM CHORD MEMBERS.

1' 6" 0 1' 2' 3'

SCALE: ¾" = 1'-0"

This document was originally issued by David A. Brittain on 15 July 2005. This document is not considered a sealed document. An original hardcopy signed and sealed document is on file with the U.S. Army Corps of Engineers, Pittsburgh District.

US Army Corps of Engineers Pittsburgh District

Submitted by: /s/ David A. Brittain SECTION CHIEF

W911WN-05-B-0002

Sheet 13 of 30

Design by: CVP

Dwn by: JAH

Ckd by: CDS

Submission Date: 17 JUNE 05

Revision Date:

DLZ 612 Hanley Road, Columbus, Ohio 43229

User: DLZ
Date: 7/15/2005
Plot Scale: AS SHOWN
Pen Table: 291061.tbl
Color Table color.tbl

Symbol	Description	Date	Appr.
B	CLARIFIED BOLT SPACING & CHORD DRAIN HOLES.	15 JUL 05	DAB
A	ROLLER ASSEMBLY REVISED. DRAIN HOLES CLARIFIED.	17 JUN 05	DAB
	UPSTREAM CHORD BOLTS REVISED. SECTION LOCATIONS		
	REVISED REVISED CHORD CONNECTIONS		

m:\proj\0421\1501.13\dgn\Structural\OLEM_S-5826b.S01

OHIO RIVER
EMSWORTH DAMS
FABRICATION OF EMERGENCY BULKHEADS
EMERGENCY BULKHEADS
PARTIAL TRUSS PLAN
1 OF 2

Drawing Number: O-LEM-58/26.2

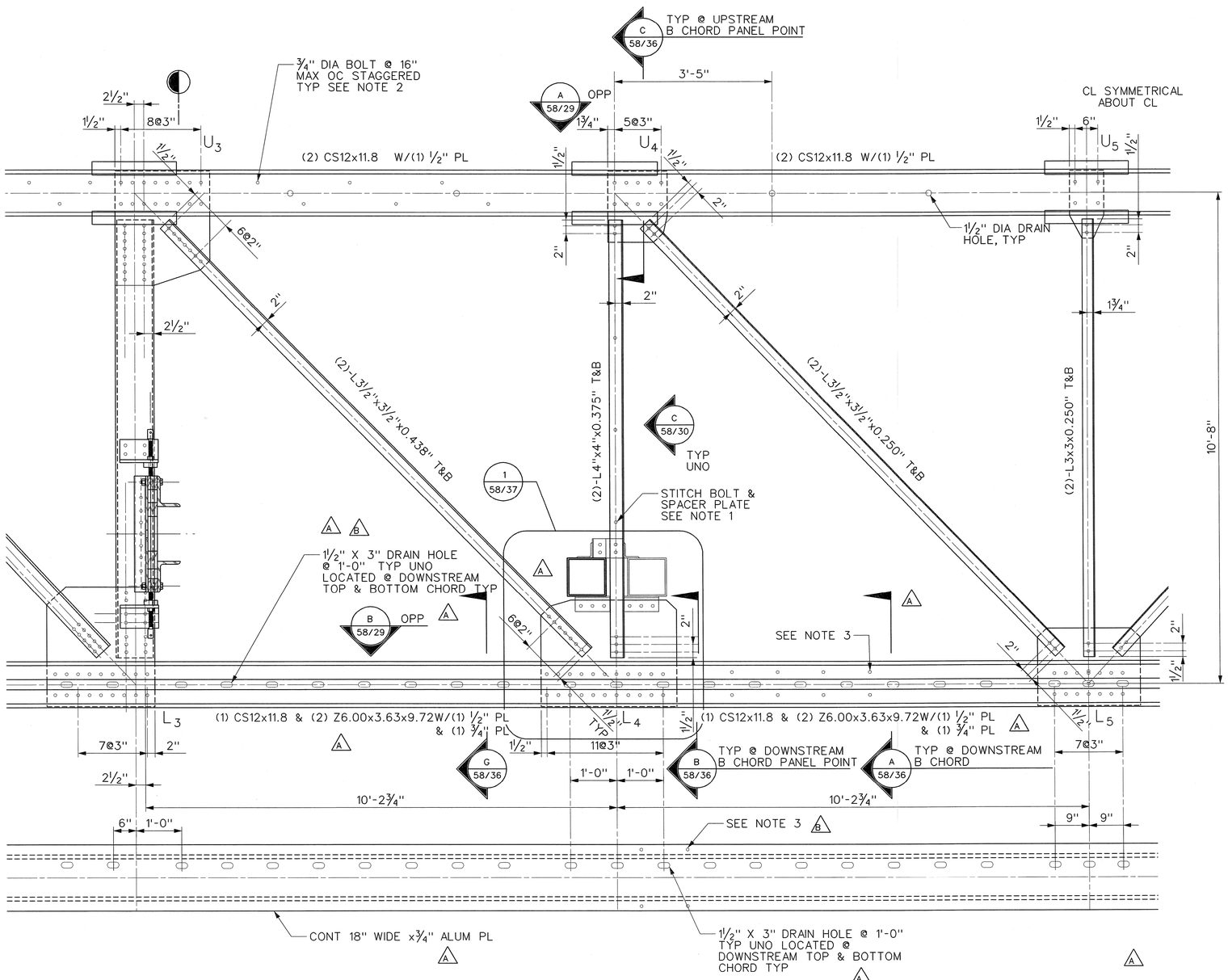

PARTIAL TRUSS PLAN (2 OF 2)

SCALE: 3/4" = 1'-0"

NOTES:

1. PROVIDE 3/4" DIA BOLT AND 1/2" SPACER PLATE AT 1/4" POINTS ON ALL WEB HORIZONTAL MEMBERS, TYP.
2. (A) PROVIDE 2 ROWS 3/4" DIA BOLTS @ 16" MAX OC STAGGERED. TYP AT ALL UPSTREAM & END CHORD MEMBERS.
3. (A) PROVIDE 2 ROWS 3/4" DIA BOLTS @ 12" MAX OC. TYP AT ALL DOWNSTREAM CHORD MEMBERS.

1' 6" 0 1' 2' 3'

SCALE: 3/4" = 1'-0"

This document was originally issued by David A. Brittain on 15 July 2005. This document is not considered a sealed document. An original hardcopy signed and sealed document is on file with the U.S. Army Corps of Engineers, Pittsburgh District.

US Army Corps of Engineers
Pittsburgh District

Submitted by: /s/ David A. Brittain
SECTION CHIEF

FB NO.: W911WN-05-B-0002

Sheet 14 of 30

Design by: DAB
Dwn by: JAH
Ckd by: CDS
Submission Date: 17 JUNE 05
Revision Date:

DLZ
6121 Huntley Road, Columbus, Ohio 43229
User: 7713
Date: 7/13/2005
Plot Scale: AS SHOWN
Pen Table: 291061.tbl
Color Table color.tbl

Symbol	Description	Date	Appr.
B	CLARIFIED BOLT SPACING AND CHORD DRAIN HOLES.	15 JUL 05	DAB
A	GUIDE BEAM CONN. REVISED. DRAIN HOLES CLARIFIED. UPSTREAM CHORD BOLTS REVISED. UPSTREAM CHORD PLATES REVISED.	17 JUN 05	DAB

m:\proj\0421\1501.13\dgn\Structural\OLEM_S-5827b.S01

OHIO RIVER
EMSWORTH DAMS
FABRICATION OF EMERGENCY BULKHEADS
EMERGENCY BULKHEADS
PARTIAL TRUSS PLAN
2 OF 2

Drawing Number: O-LEM-58/27.2

NOTES:
1. PROVIDE ¾" DIA BOLT AND ½" SPACER PLATE AT 1/3 POINTS ON ALL UPSTREAM VERTICAL WEB MEMBERS.

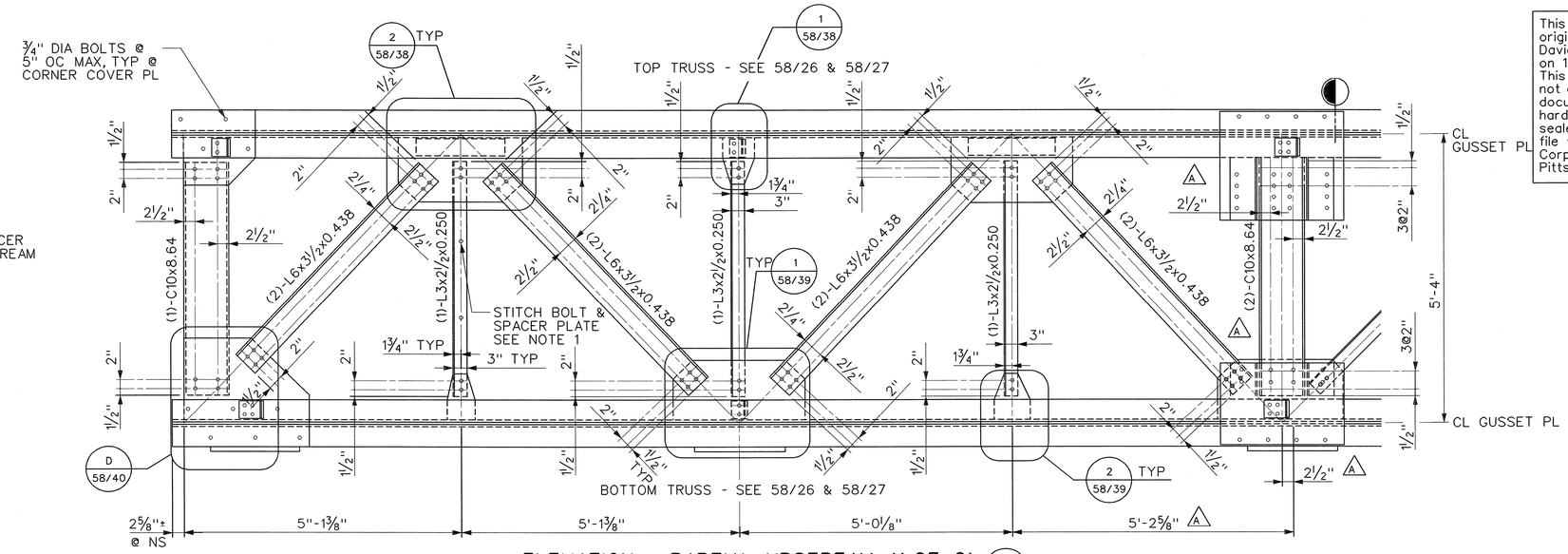

ELEVATION - PARTIAL UPSTREAM (1 OF 2)

A 58/26

SCALE: ¾" = 1'-0"

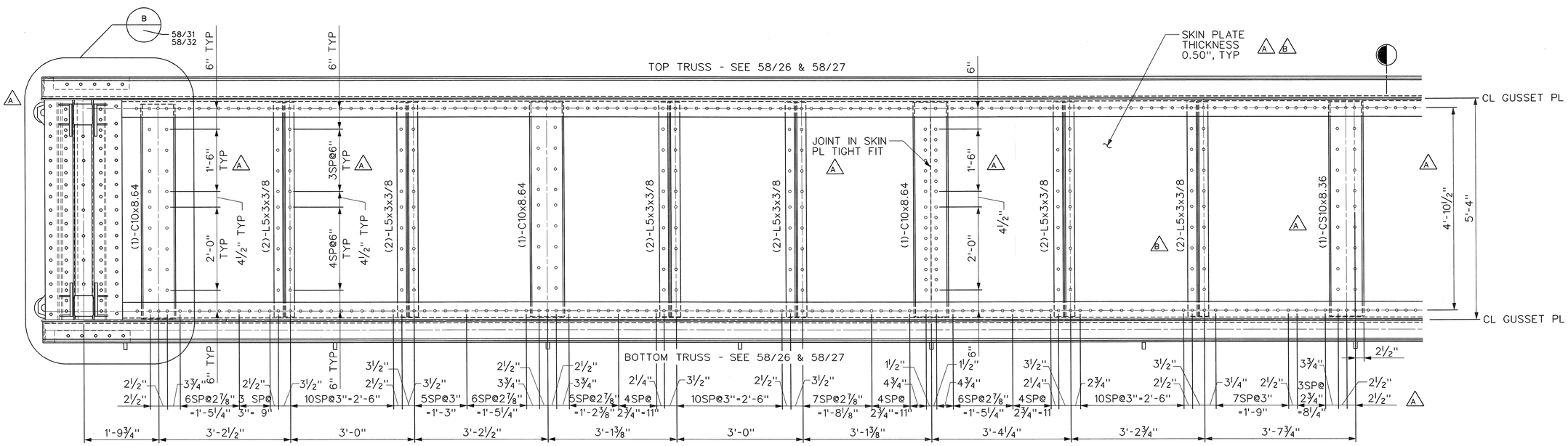

ELEVATION - PARTIAL DOWNSTREAM (1 OF 2)

B 58/26

SCALE: ¾" = 1'-0"

NOTE
1. WEB MEMBERS NOT SHOWN FOR CLARITY.
2. CONTRACTOR REQUIRED BALLAST TO OBTAIN PROPER CENTER OF GRAVITY IS ESTIMATED TO BE 350 POUNDS APPLIED AT THE CENTER OF THE DOWNSTREAM CHORD. CONTRACTOR SHALL DETERMINE ACTUAL BALLAST WEIGHT REQUIRED IN THE FABRICATION SHOP.

1' 6" 0 1' 2' 3'

SCALE: ¾" = 1'-0"

This document was originally issued by David A. Brittain on 15 July 2005. This document is not considered a sealed document. An original hardcopy signed and sealed document is on file with the U.S. Army Corps of Engineers, Pittsburgh District.

US Army Corps of Engineers Pittsburgh District

Submitted by: /s/ David A. Brittain SECTION CHIEF

IFB NO.: W911WN-05-B-0002

Sheet 15 of 30

Design by: DAB | Dwn by: JAH | Ckd by: CDS

Submission Date: 17 JUNE 05 | Revision Date:

DLZ 6121 Huntley Road, Columbus, Ohio 43229

User: DLZ
Date: 07/14/2005
Plot Scale: AS SHOWN
Pen Table: 291061.tbl
Color Table color.tbl

Symbol	Description	Date	Appr.
B	REVISED SKIN PLATE THICKNESS, CORRECT ANGLE COUNT AND ADDED NOTE.	15 JUL 05	DAB
A	ROLLER ASSEMBLY DETAILS & SKIN PLATE THICKNESS REVISED. CHANNEL SIZE CHANGED, SKIN PLATE JOINTS & BOLTS INDICATED, GUSSET PLATES-DETAILS REVISED.	17 JUN 05	DAB

m:\proj\04211501.13\dgn\Structural\OLEM_S-5828b.S01

OHIO RIVER
EMSWORTH DAMS
FABRICATION OF EMERGENCY BULKHEADS
EMERGENCY BULKHEADS
ELEVATIONS - PARTIAL DOWNSTREAM & UPSTREAM 1 OF 2

Drawing Number: O-LEM-58/28.2

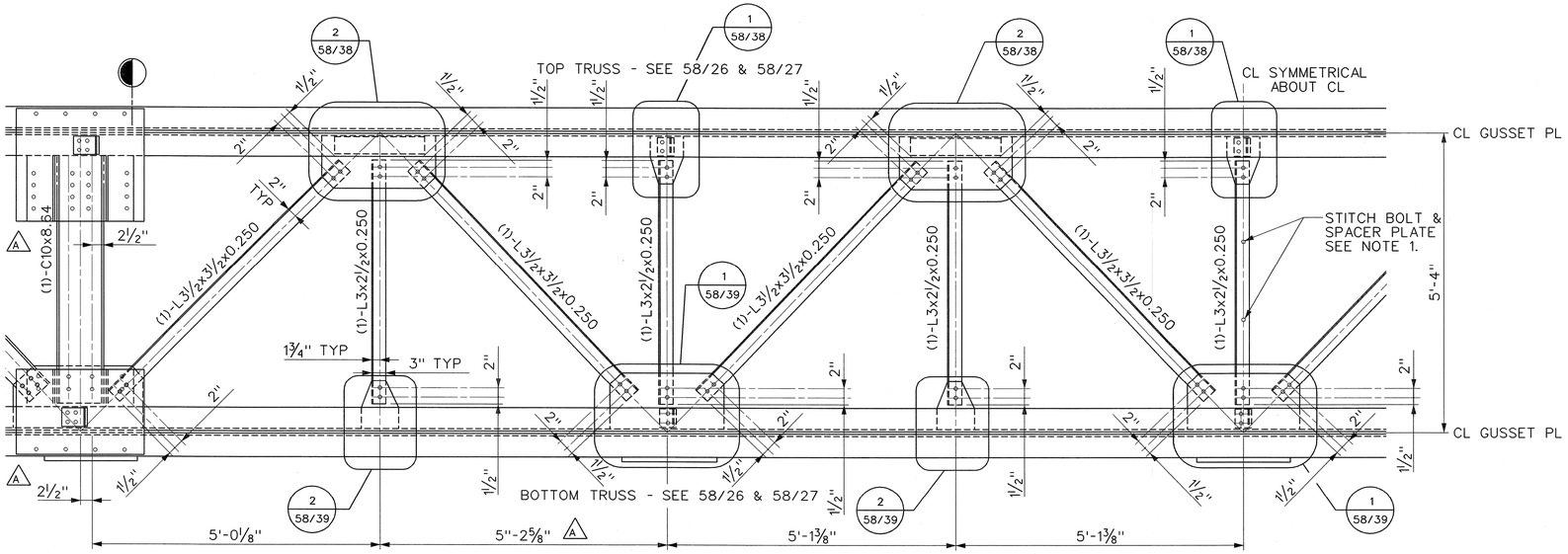

ELEVATION - PARTIAL UPSTREAM (2 OF 2) (A 58/27)

SCALE: ¾" = 1'-0"

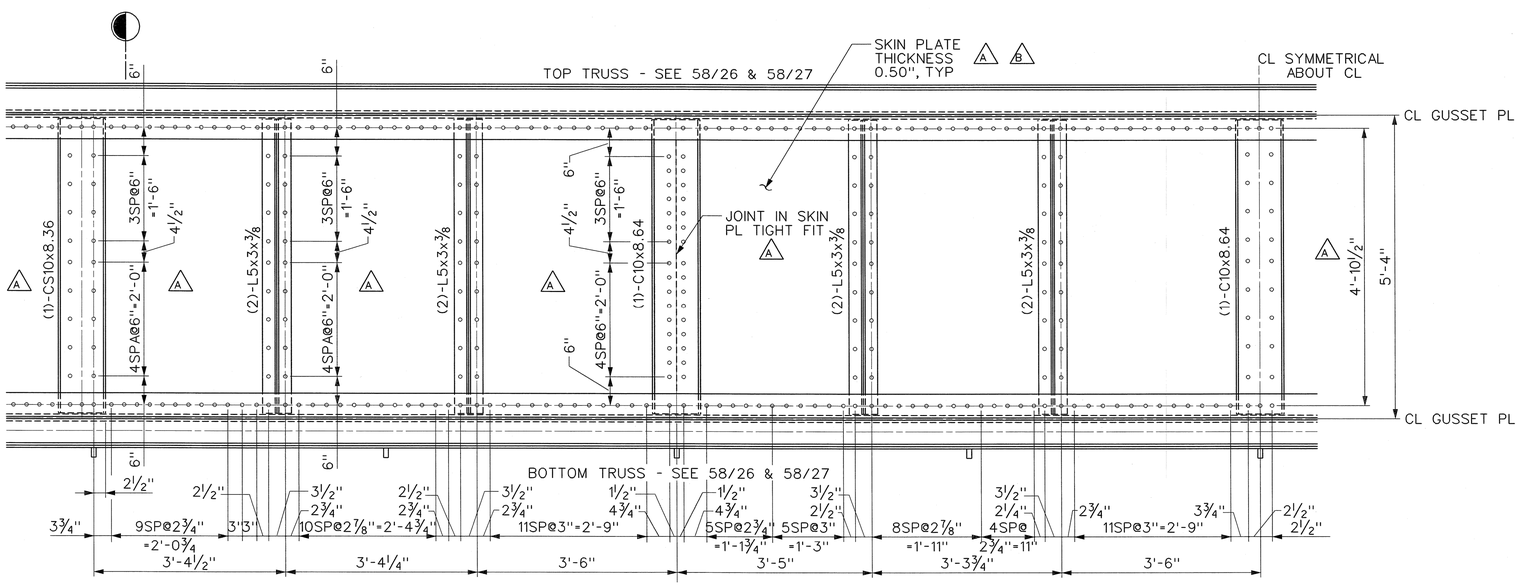

ELEVATION - PARTIAL DOWNSTREAM (2 OF 2) (B 58/27)

SCALE: ¾" = 1'-0"

NOTE
1. WEB MEMBERS NOT SHOWN FOR CLARITY.
2. CONTRACTOR REQUIRED BALLAST TO OBTAIN PROPER CENTER OF GRAVITY IS ESTIMATED TO BE 350 POUNDS APPLIED AT THE CENTER OF THE DOWNSTREAM CHORD. CONTRACTOR SHALL DETERMINE ACTUAL BALLAST WEIGHT REQUIRED IN THE FABRICATION SHOP.

NOTES:
1. PROVIDE ¾" DIA. BOLTS AND ½" SPACER PLATE AT 1/3 POINTS ON ALL UPSTREAM VERTICAL WEB MEMBERS

1' 6" 0 1' 2' 3'

SCALE: ¾" = 1'-0"

US Army Corps of Engineers Pittsburgh District

This document was originally issued by David A. Brittain on 15 July 2005. This document is not considered a sealed document. An original hardcopy signed and sealed document is on file with the U.S. Army Corps of Engineers, Pittsburgh District.

Submitted by: /s/ David A. Brittain, SECTION CHIEF

IFB NO.: W911WN-05-B-0002

Sheet 16 of 30

Design by: CVP

Checked by: CDS

Drawn by: JAH

Submission Date: 17 JUNE 05

Revision Date:

DLZ 6121 Huntley Road, Columbus, Ohio 43229

User: DLZ
Date: 7/14/2005
Plot Scale: AS SHOWN
Pen Table: 2911061.tbl
Color Table color.tbl

Symbol	Description	Date	Appr.
B	REVISED SKIN PLATE THICKNESS AND ADDED NOTE.	15 JUL 05	DAB
A	SKIN PLATE THICKNESS REVISED. ADDED SKIN PLATE BOLTS. GUSSET PLATES-DETAILS REVISED.	17 JUN 05	DAB

m:\proj\0421\1501.13\dgn\Structural\OLEM_S-5829b.S01

OHIO RIVER
EMSWORTH DAMS
FABRICATION OF EMERGENCY BULKHEADS
EMERGENCY BULKHEAD
ELEVATIONS - PARTIAL DOWNSTREAM & UPSTREAM 2 OF 2

Drawing Number: O-LEM-58/29.2

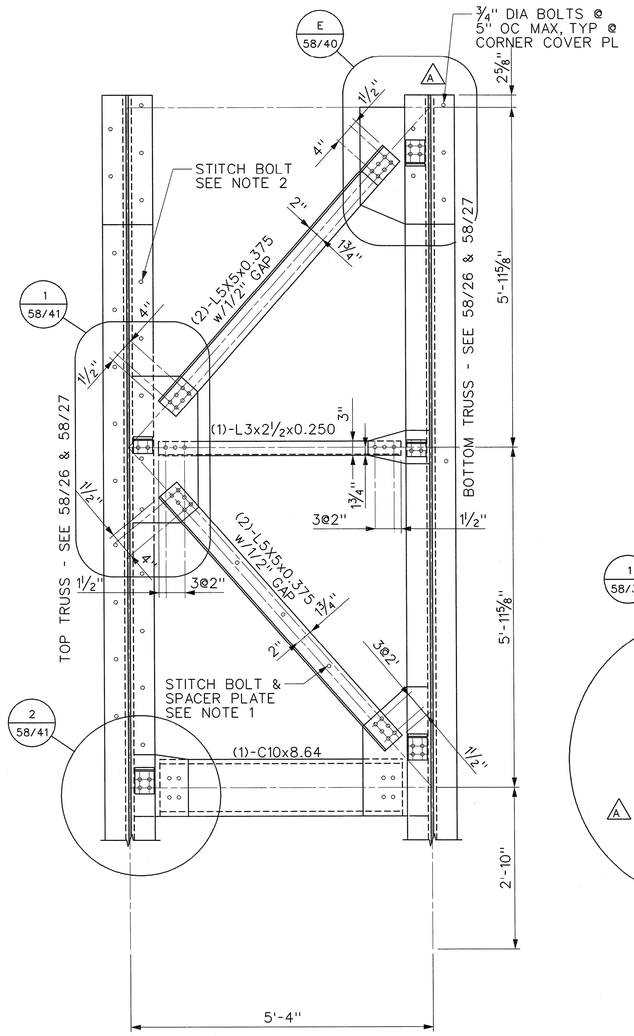

ELEVATION - END PANEL (A / 58/26)
SCALE: 3/4" = 1'-0"

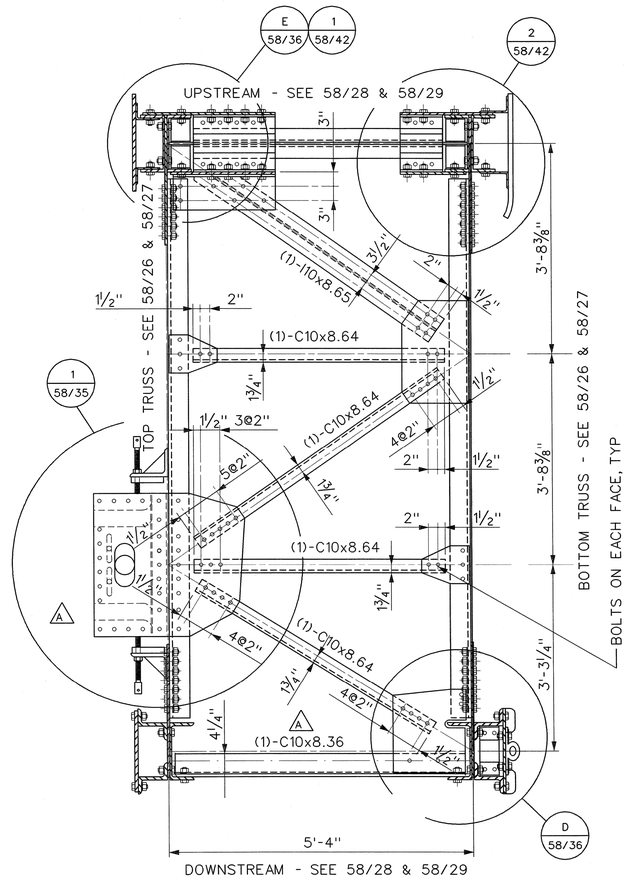

ELEVATION - INTERMEDIATE PANEL @ LIFT POINT (B / 58/26)
SCALE: 3/4" = 1'-0"

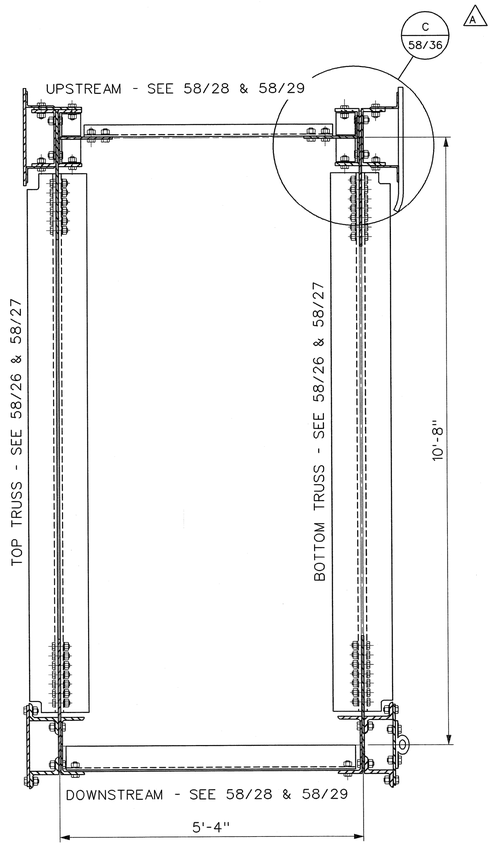

ELEVATION - INTERMEDIATE PANEL @ TYPICAL PANEL (C / 58/26, 58/27)
SCALE: 3/4" = 1'-0"

NOTES:
1. PROVIDE 3/4" DIA BOLT AND 1/2" SPACER PLATE AT 1/4" POINTS ON ALL END PANEL WEB MEMBERS.
2. PROVIDE 3/4" DIA BOLTS @ 6" ± OC TO FASTEN COVER PLATE TO CS12 AT ALL END PANEL CHORD MEMBERS.
3. FOR GENERAL STRUCTURAL NOTES SEE DRAWING 0/26 COORDINATE WITH NOTES ON DRAWING 58/25.

1' 6" 0 1' 2' 3'
SCALE: 3/4" = 1'-0"

US Army Corps of Engineers
Pittsburgh District

This document was originally issued by David A. Brittain on 15 July 2005. This document is not considered a sealed document. An original hardcopy signed and sealed document is on file with the U.S. Army Corps of Engineers, Pittsburgh District.

Submitted by: /s/ David A. Brittain, SECTION CHIEF
Design by: CVP
Dwn by: JAH
Ckd by: CDS
Submission Date: 17 JUNE 05
Revision Date:
IFB NO.: W911WN-05-B-0002
Sheet 17 of 30

DLZ
6121 Huntley Road, Columbus, Ohio 43229
User: DLZ
Date: 7/14/2005
Plot Scale: AS SHOWN
Pen Table: 291061.tbl
Color Table color.tbl

Symbol	Description	Date	Appr.
B	ADDED NOTE 3.	15 JUL 05	DAB
A	CONNECTION AT LIFT POINT REVISED. ELEVATION A-GUSSET PLATE DIMENSIONS REVISED. CROSS REFERENCES ADDED AND REVISED. ELEVATION B-DOWNSTREAM CHANNEL CHANGED.	17 JUN 05	DAB

M:\proj\0421\1501.13\dgn\Structural\OLEM_S-5830b.s01

OHIO RIVER
EMSWORTH DAMS
FABRICATION OF EMERGENCY BULKHEADS
EMERGENCY BULKHEADS
ELEVATIONS - END PANELS & INTERMEDIATE PANELS

Drawing Number: O-LEM-58/30.2

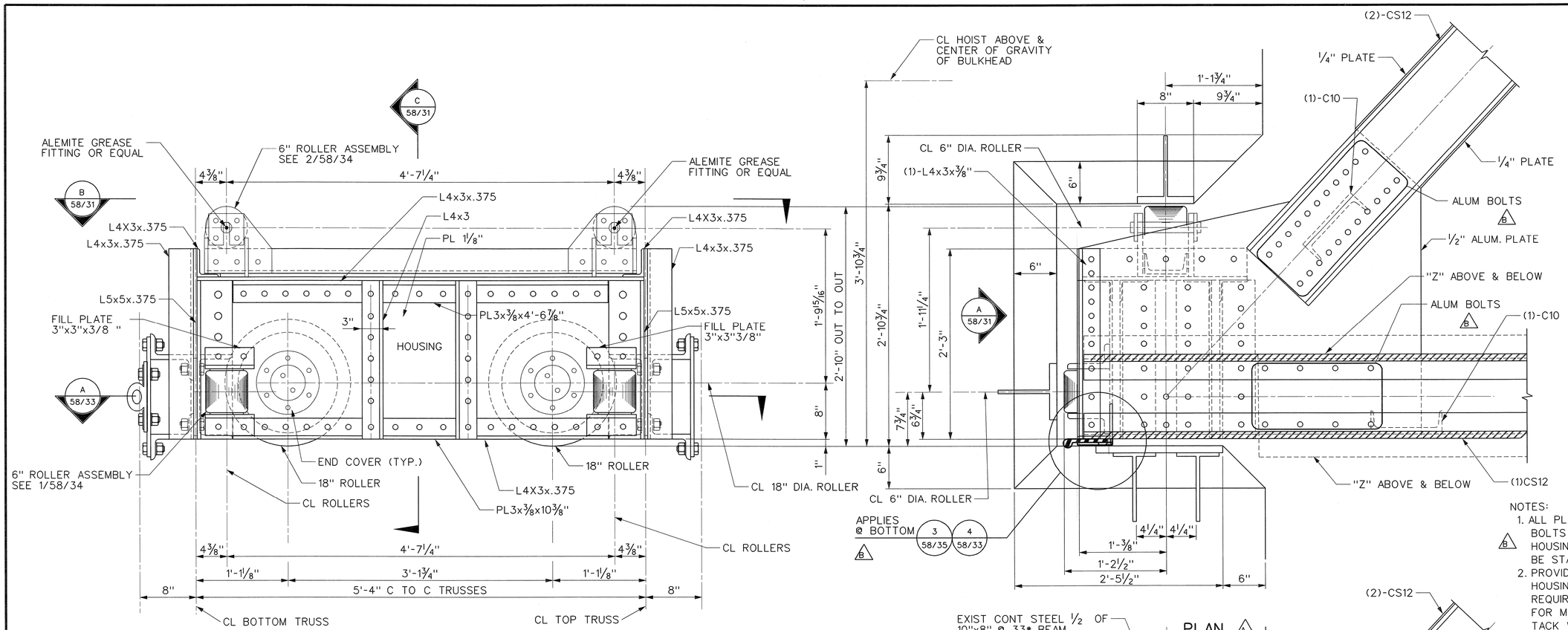

ELEVATION (A 58/31)
SCALE: 1½" = 1'-0"

HOUSING ASSEMBLY
SCALE: 1½" = 1'-0"

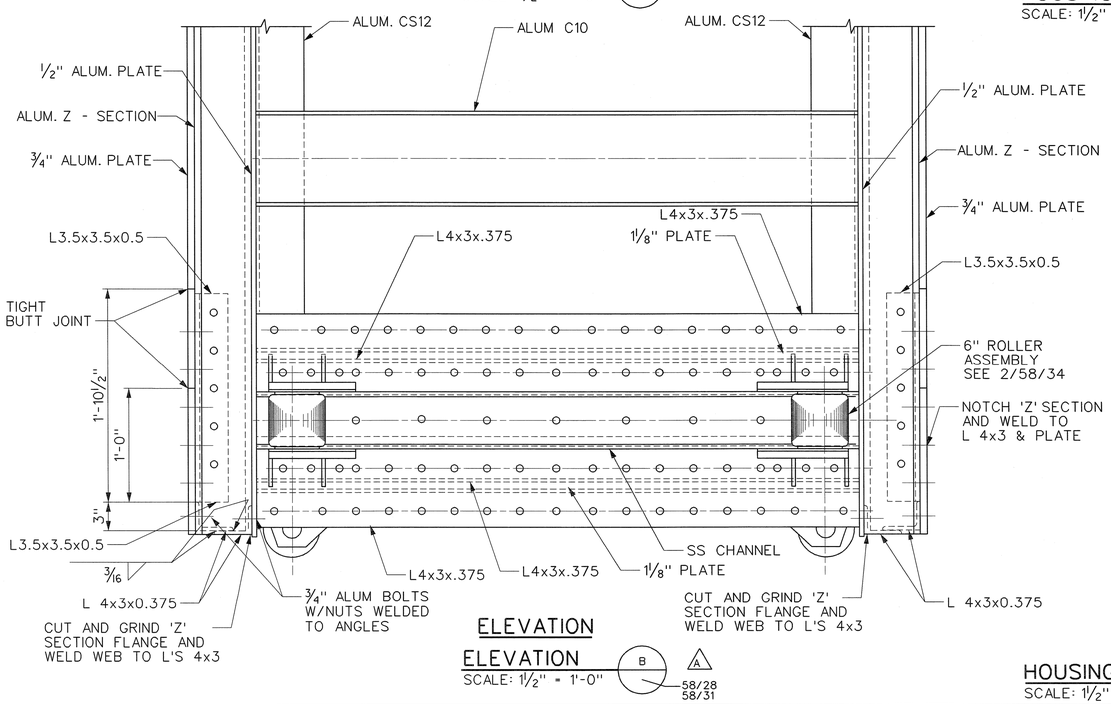

ELEVATION
ELEVATION (B 58/28 58/31)
SCALE: 1½" = 1'-0"

HOUSING ASSEMBLY
SCALE: 1½" = 1'-0"

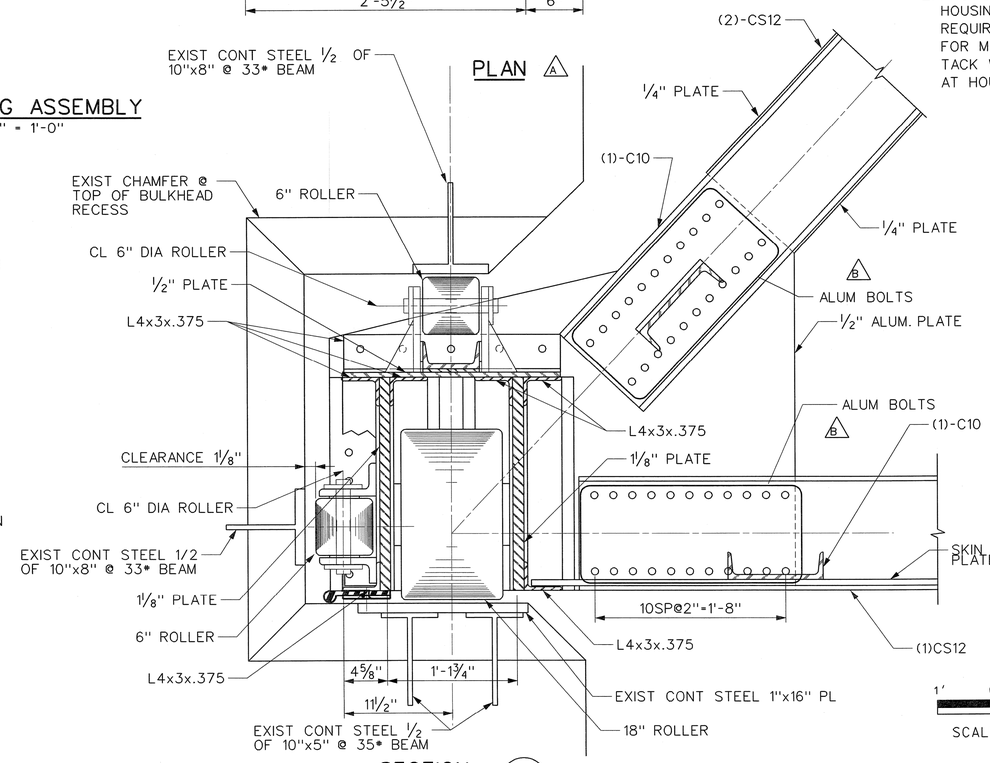

SECTION (C 58/31)
SCALE: 1½" = 1'-0"

SCALE: 1-1/2'' = 1'-0"

NOTES:
1. ALL PLATES, FRAMING AND BOLTS ASSOCIATED WITH THE HOUSING ASSEMBLY SHALL BE STAINLESS STEEL.
2. PROVIDE DOUBLE NUTS AT HOUSING ASSEMBLY WHERE REQUIRED TO BE REMOVED FOR MAINTENANCE. DO NOT TACK WELD DOUBLE NUTS AT HOUSING ASSEMBLY.

This document was originally issued by David A. Brittain on 15 July 2005. This document is not considered a sealed document. An original hardcopy signed and sealed document is on file with the U.S. Army Corps of Engineers, Pittsburgh District.

US Army Corps of Engineers Pittsburgh District

Submitted by: /s/ David A. Brittain, SECTION CHIEF
IFB NO.: W911WN-05-B-0002
Sheet 18 of 30

Design by: CVP
Dwn by: JAK
Ckd by: CDS
Submission Date: 17 JUNE 05
Revision Date:

DLZ
6121 Huntley Road, Columbus, Ohio 43229
User: D74
Date: 7/14/2005
Plot Scale: AS SHOWN
Pen Table: 2911061.tbl
Color Table color.tbl

Symbol	Description	Date	Appr.
B	REVISED NOTES 1 & 2. CLARIFIED ALUM & SS BOLTS.	15 JUL 05	DAB
A	REVISED CONNECTIONS FOR CHORDS.	17 JUN 05	DAB
	REVISED HOUSING & ROLLERS ASSEMBLY		

M:\proj\042\1501.13\dgn\Structural\OLEM_S-5831b.s01

OHIO RIVER
EMSWORTH DAMS
FABRICATION OF EMERGENCY BULKHEADS
EMERGENCY BULKHEADS
PLAN & ELEVATIONS
HOUSING & ROLLERS ASSEMBLY

Drawing Number: O-LEM-58/31.2

LOCK IN SAFETY, DAM UP ACCIDENTS

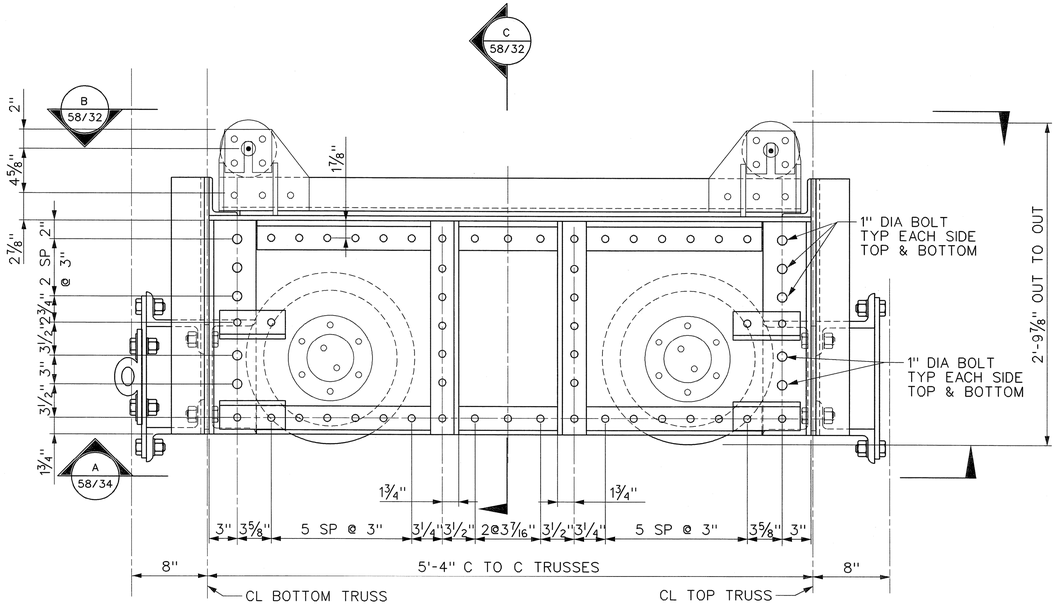

ELEVATION

ELEVATION (A 58/32) SCALE: 1½" = 1'-0"

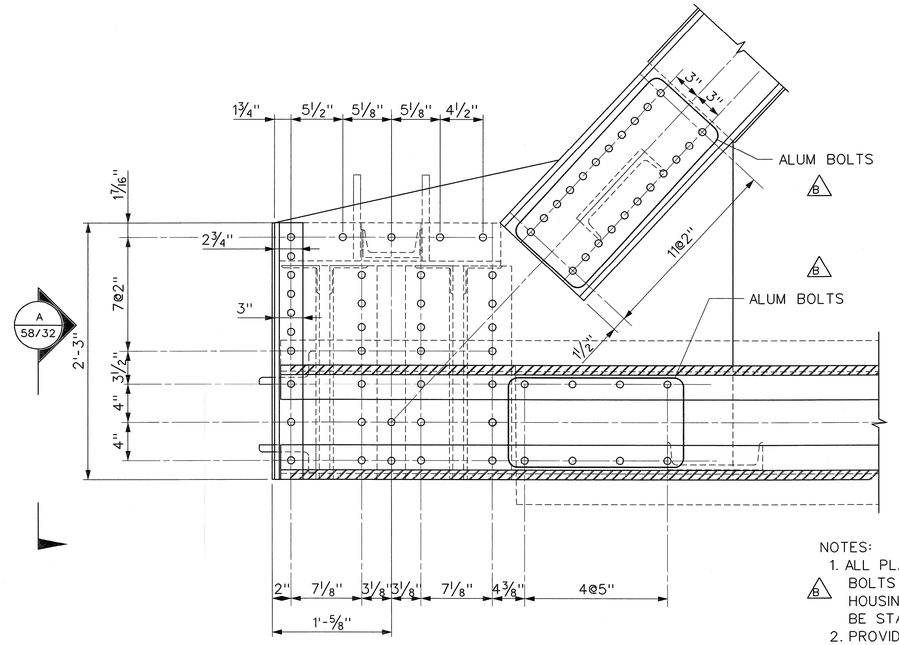

PLAN

HOUSING ASSEMBLY
SCALE: 1½" = 1'-0"

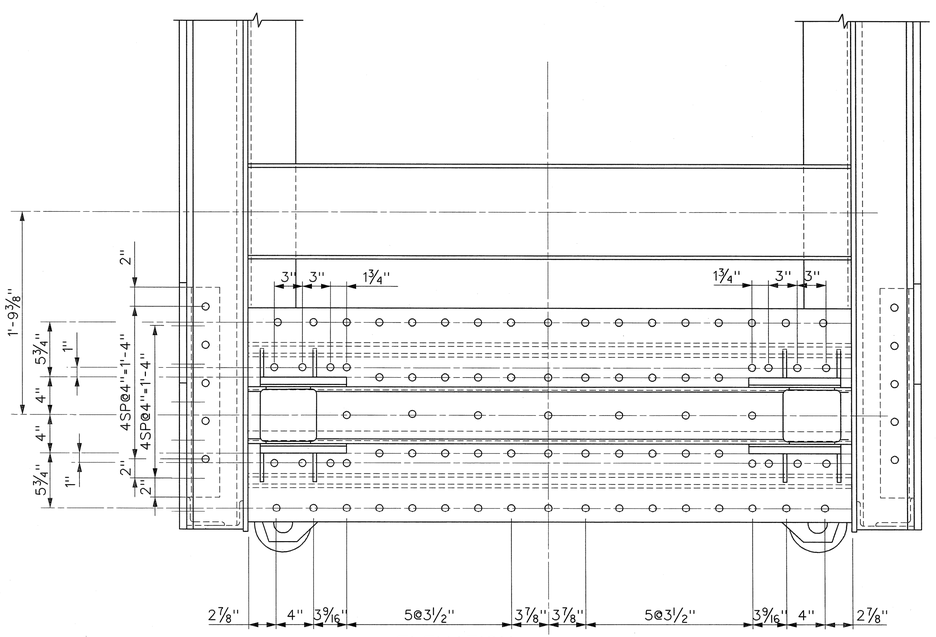

ELEVATION

ELEVATION (B 58/28 58/32) SCALE: 1½" = 1'-0"

HOUSING ASSEMBLY
SCALE: 1½" = 1'-0"

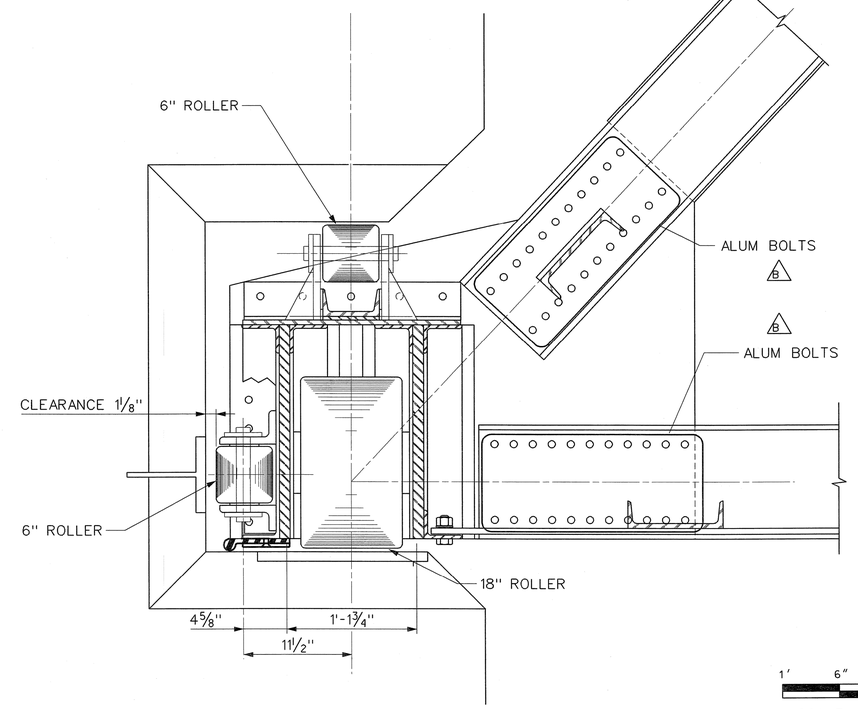

SECTION (C 58/32) SCALE: 1½" = 1'-0"

SCALE: 1-1/2" = 1'-0"

NOTES:
1. ALL PLATES, FRAMING AND BOLTS ASSOCIATED WITH THE HOUSING ASSEMBLY SHALL BE STAINLESS STEEL.
2. PROVIDE DOUBLE NUTS AT HOUSING ASSEMBLY WHERE REQUIRED TO BE REMOVED FOR MAINTENANCE. DO NOT TACK WELD DOUBLE NUTS AT HOUSING ASSEMBLY.

This document was originally issued by David A. Brittain on 15 July 2005. This document is not considered a sealed document. An original hardcopy signed and sealed document is on file with the U.S. Army Corps of Engineers, Pittsburgh District.

US Army Corps of Engineers Pittsburgh District

Submitted by: /s/ David A. Brittain SECTION CHIEF
IFB NO.: W911WN-05-B-0002
Sheet 19 of 30

Design by: CVP
Dwn by: JAH
Ckd by: CDS
Submission Date: 17 JUNE 05
Revision Date:

DLZ
6121 Huntley Road, Columbus, Ohio 43229
User: DLZ
Date: 7/14/2005
Plot Scale: AS SHOWN
Pen Table: 291061.tbl
Color Table color.tbl

Symbol	Description	Date	Appr.
B	REVISED NOTES 1 & 2. CLARIFIED ALUM & SS BOLTS	15 JUL 05	DAB
A	REVISED REVISED CONNECTIONS FOR CHRDS.	17 JUN 05	DAB
	REVISED HOUSING & ROLLERS ASSEMBLY.		

M:\proj\0421\1501.13\dgn\Structural\OLEM_S-5832b.s01

OHIO RIVER
EMSWORTH DAMS
FABRICATION OF EMERGENCY BULKHEADS
EMERGENCY BULKHEADS
PLAN & ELEVATIONS
HOUSING & ROLLERS ASSEMBLY BOLT LAYOUT

Drawing Number: O-LEM-58/32.2

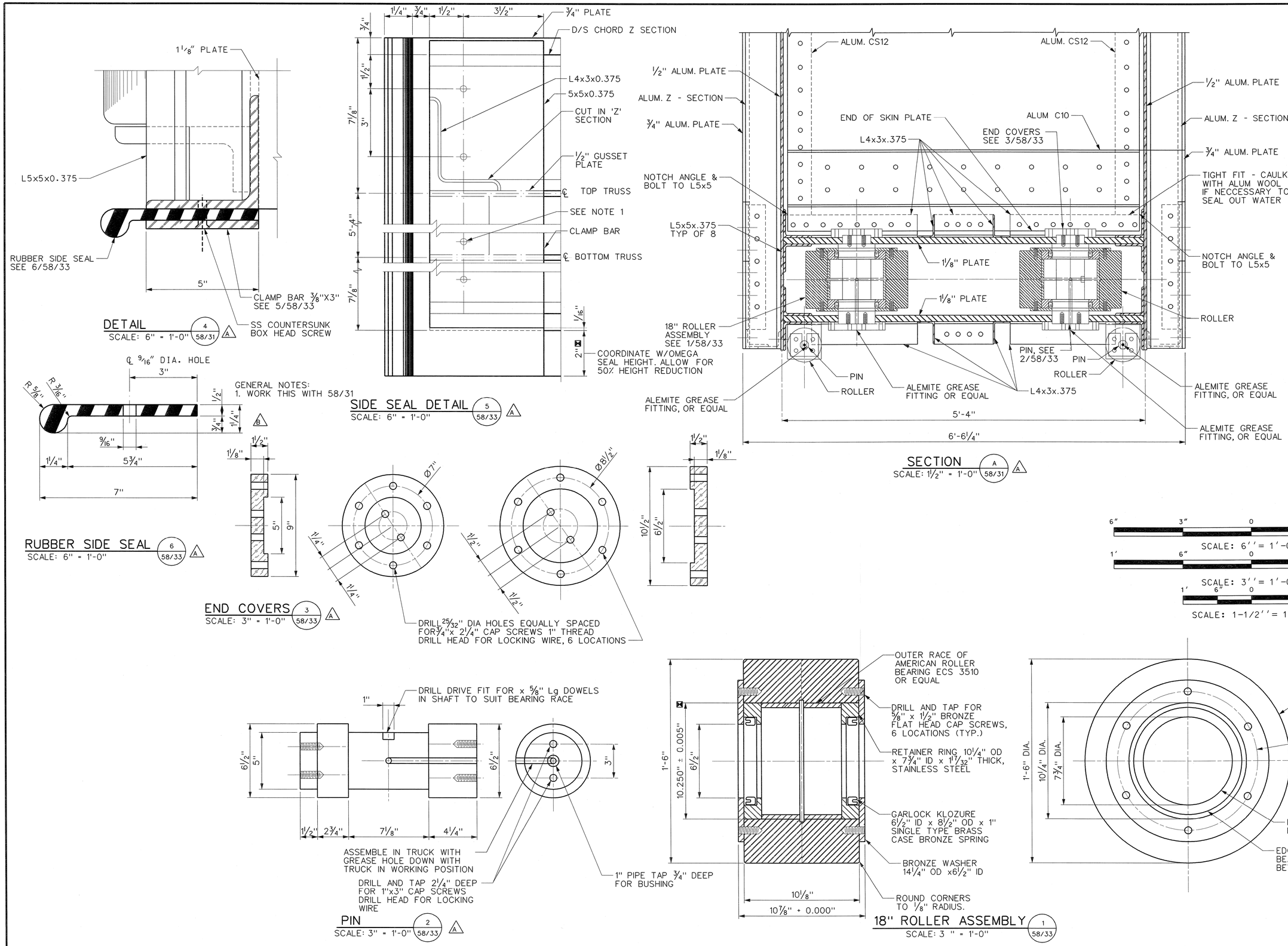

This document was originally issued by David A. Brittain on 15 July 2005. This document is not considered a sealed document. An original hardcopy signed and sealed document is on file with the U.S. Army Corps of Engineers, Pittsburgh District.

US Army Corps of Engineers Pittsburgh District

Submitted by: /s/ David A. Brittain, SECTION CHIEF

IFB NO.: W911WN-05-B-0002

Sheet 20 of 30

Design by: CVP

Ckd by: CDS

Dwn by: JAH

Submission Date: 17 JUNE 05

Revision Date:

DLZ 612 Hanley Road, Columbus, Ohio 43229

User: 7714
Date: 7/14/2005
Plot Scale: AS SHOWN
Pen Table: 291106t.tbl
Color Table color.tbl

Symbol	Description	Date	Appr.
B	ADJUSTED TEXT FOR CLARITY.	15 JUL 05	DAB
A	REVISED ROLLERS, PINS, SEALS, & HOUSING ASSEMBLY.	17 JUN 05	DAB

M:\proj\0421\1501.13\dgn\Structural\OLEM_S-5833b.s01

OHIO RIVER
EMSWORTH DAMS
FABRICATION OF EMERGENCY BULKHEADS
EMERGENCY BULKHEADS
SECTIONS & DETAILS
HOUSING & ROLLERS ASSEMBLY 1 of 2

Drawing Number: O-LEM-58/33.2

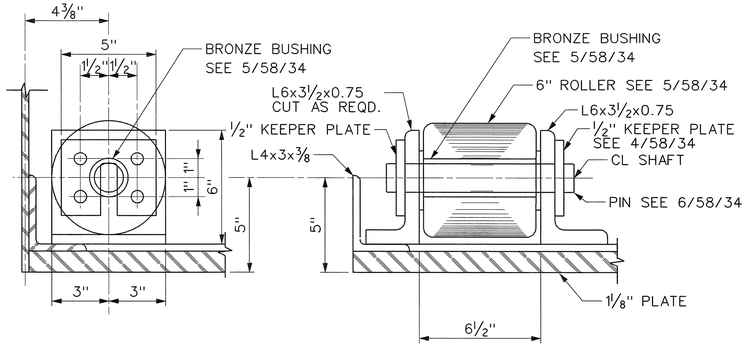

ROLLER ASSEMBLY (1 / 58/31)
SCALE: 3" = 1'-0"

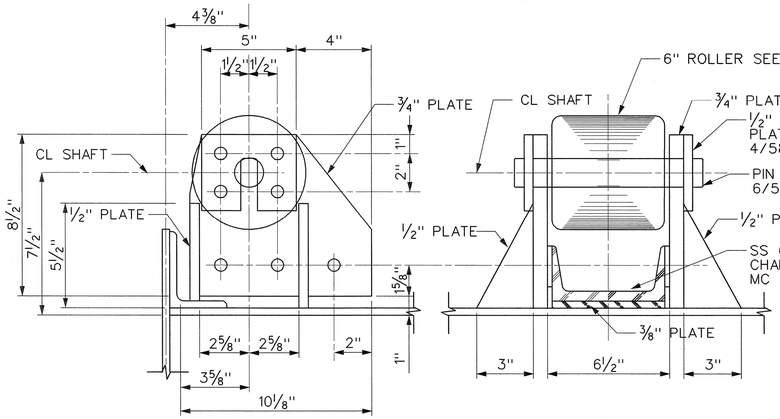

ROLLER ASSEMBLY (2 / 58/31)
SCALE: 3" = 1'-0"

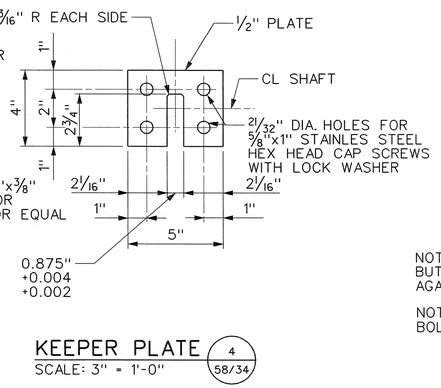

KEEPER PLATE (4 / 58/34)
SCALE: 3" = 1'-0"

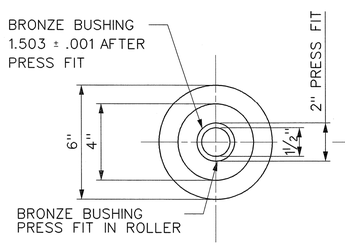

6" ROLLER (5 / 58/34) A
SCALE: 3" = 1'-0"

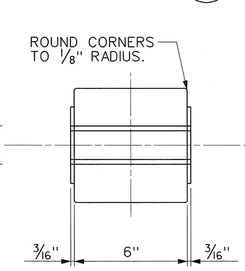

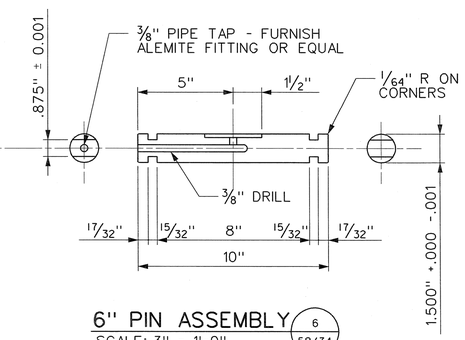

6" PIN ASSEMBLY (6 / 58/34)
SCALE: 3" = 1'-0"

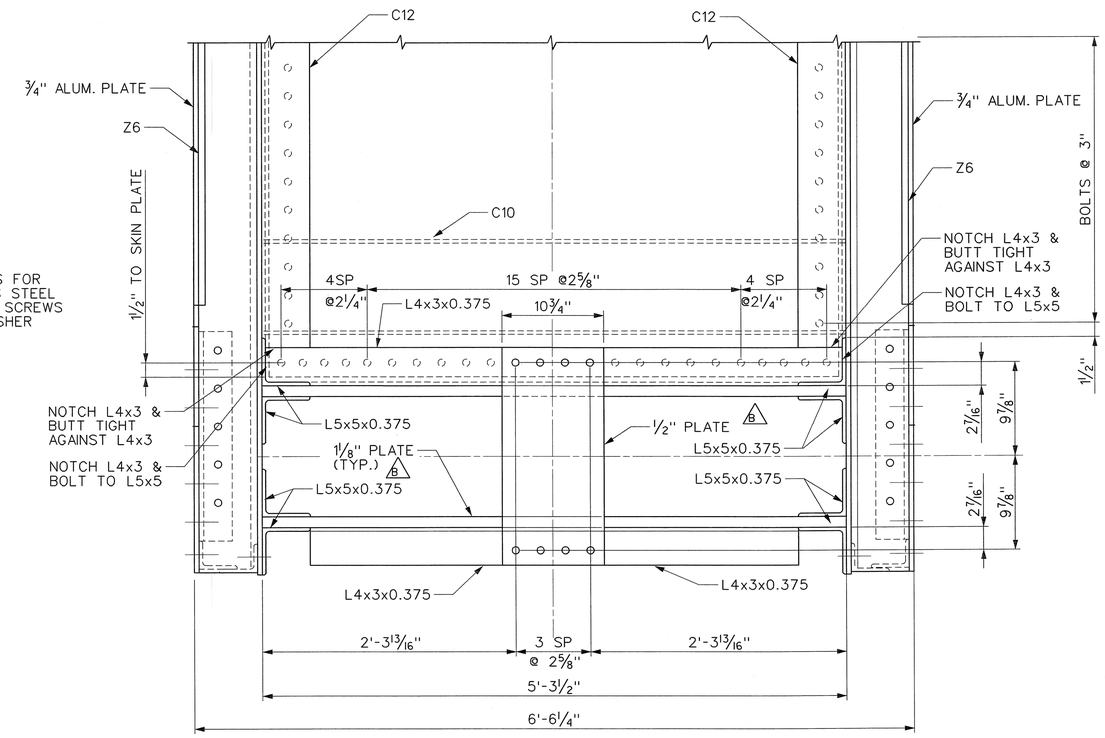

SECTION (A / 58/32) A
SCALE: 1 1/2" = 1'-0"

B

NOTES:
1. ALL PLATES, FRAMING AND BOLTS ASSOCIATED WITH THE HOUSING ASSEMBLY SHALL BE STAINLESS STEEL.
2. PROVIDE DOUBLE NUTS AT HOUSING ASSEMBLY WHERE REQUIRED TO BE REMOVED FOR MAINTENANCE. DO NOT TACK WELD DOUBLE NUTS AT HOUSING ASSEMBLY.

This document was originally issued by David A. Brittain on 15 July 2005. This document is not considered a sealed document. An original hardcopy signed and sealed document is on file with the U.S. Army Corps of Engineers, Pittsburgh District.

US Army Corps of Engineers
Pittsburgh District

Submitted by: /s/ David A. Brittain, SECTION CHIEF
Design by: CVP
Dwn by: JAH
Ckd by: CDS
Submission Date: 17 JUNE 05
Revision Date:
File No.: W911WN-05-B-0002
Sheet 21 of 30

DLZ
813 Hurley Road, Columbus, Ohio 43229
User: DLZ
Date: 7/14/2005
Plot Scale: AS SHOWN
Pen Table: 291061.tbl
Color Table color.tbl

Symbol	Description	Date	Appr.
B	CLARIFIED SS CHANNEL & HOUSING ASSEMBLY REQ.	15 JUL 05	DAB
A	REVISED HOUSING & ROLLER ASSEMBLY AND 6" ROLLER	17 JUN 05	DAB

M:\proj\0421\1501.13\dgn\Structural\OLEM_S-5834b.S01

OHIO RIVER
EMSWORTH DAMS
FABRICATION OF EMERGENCY BULKHEADS
EMERGENCY BUKHEADS
SECTIONS & DETAILS
HOUSING & ROLLERS ASSEMBLY 2 OF 2

Drawing Number: O-LEM-58/34.2

NOTE:
ALL ELEMENTS ASSOCIATED W/LIFT ASSEMBLY TO BE STAINLESS STEEL W/3/4" DIA STAINLESS STEEL BOLTS & NUTS UNO.

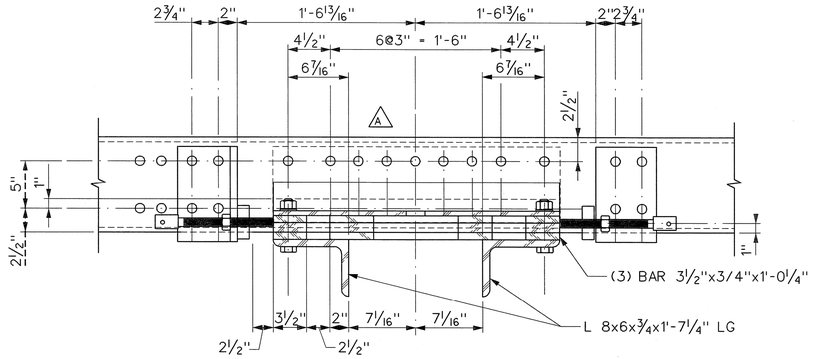

SECTION (B / 58/35)
SCALE: 1½" = 1'-0"

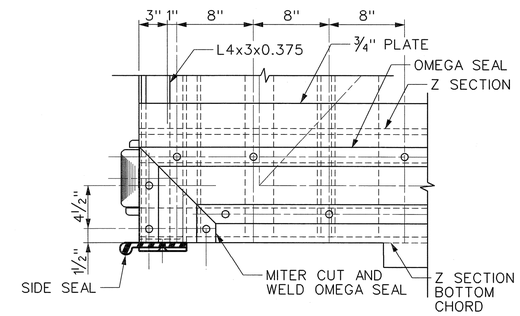

DETAIL (3 / 58/31)
SCALE: 1½" = 1'-0"

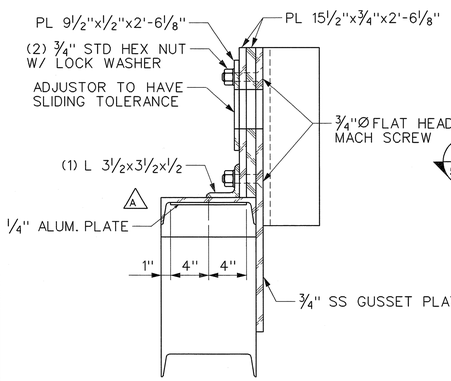

SECTION (A / 58/35)
SCALE: 1½" = 1'-0"

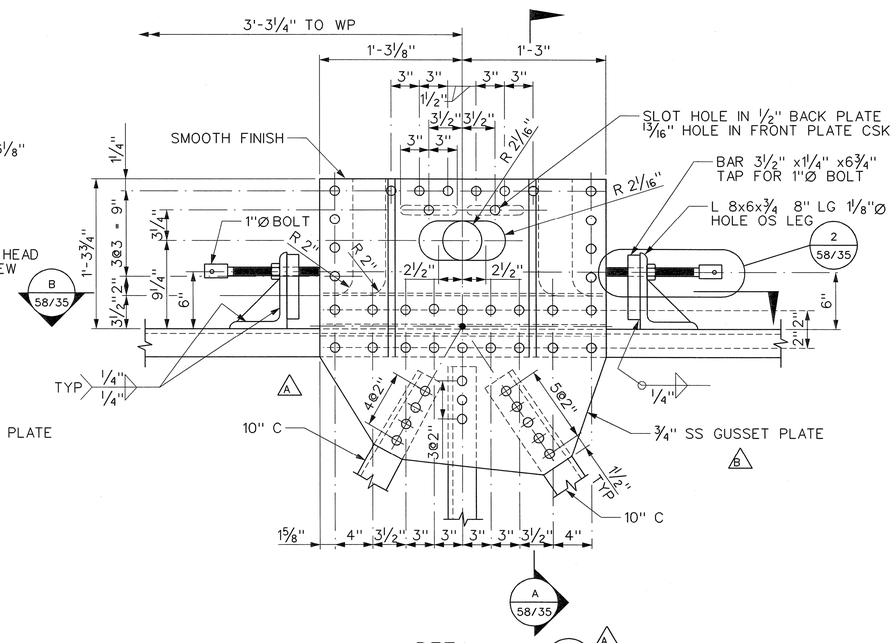

DETAIL (1 / 58/30)
SCALE: 1½" = 1'-0"

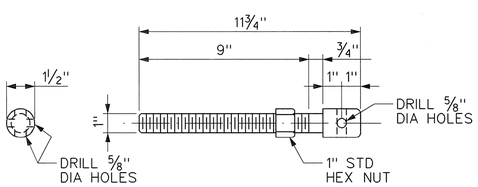

ADJUSTING SCREW DETAIL (2 / 58/35)
SCALE: 3" = 1'-0"

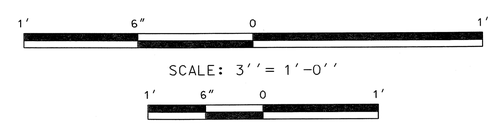

This document was originally issued by David A. Brittain on 15 July 2005. This document is not considered a sealed document. An original hardcopy signed and sealed document is on file with the U.S. Army Corps of Engineers, Pittsburgh District.

US Army Corps of Engineers Pittsburgh District

Submitted by: /s/ David A. Brittain, SECTION CHIEF
IFB NO.: W911WN-05-B-0002
Sheet 22 of 30

Design by: CVP
Dwn by: JAH
Ckd by: CDS
Submission Date: 17 JUNE 05
Revision Date:

DLZ
6121 Huntley Road, Columbus, Ohio 43229
User: DLZ
Date: 7/14/2005
Plot Scale: AS SHOWN
Pen Table: 2911061.tbl
Color Table color.tbl

Symbol	Description	Date	Appr.
B	CLARIFIED SS GUSSET PLATE.	15 JUL 05	DAB
A	REVISED LIFTING ASSEMBLY. ADDED SEAL DETAIL. DETAIL 1-WORK POINT. REVISED. SECTION D. ADDED. SECTION B-BOLTS ADDED.	17 JUN 05	DAB

m:\proj\0421\1501.13\dgn\Structural\OLEM_S-5835b.s01

OHIO RIVER
EMSWORTH DAMS
FABRICATION OF EMERGENCY BULKHEADS
EMERGENCY BULKHEADS
SECTION & DETAILS
LIFTING ASSEMBLY

Drawing Number: O-LEM-58/35.2

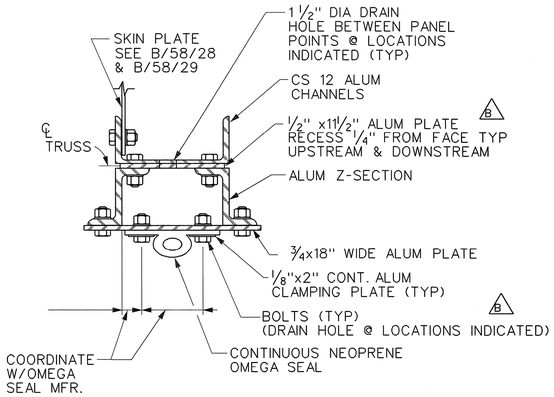

SECTION A
SCALE: 1 1/2" = 1'-0"
58/26
58/27

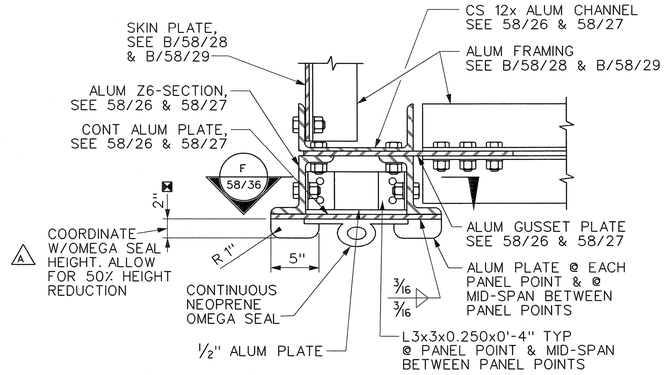

SECTION B
SCALE: 1 1/2" = 1'-0"
58/26
58/27
58/36

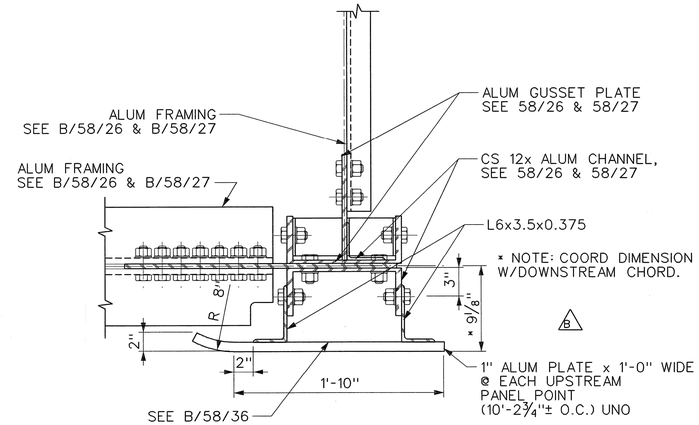

SECTION C
SCALE: 1 1/2" = 1'-0"
58/26
58/27
58/30

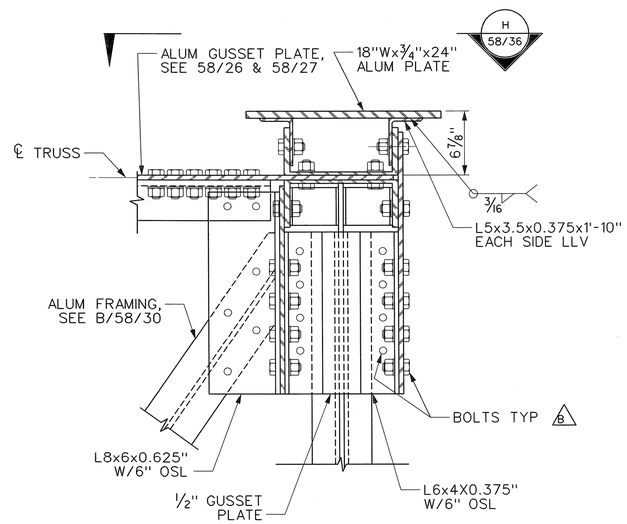

SECTION E
SCALE: 1 1/2" = 1'-0"
58/26
58/27
58/30

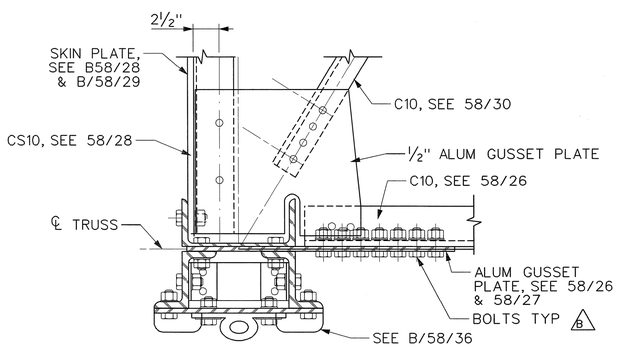

NOTE: SEE B/58/36 FOR INFO NOT SHOWN

SECTION D
SCALE: 1 1/2" = 1'-0"
58/26
58/30

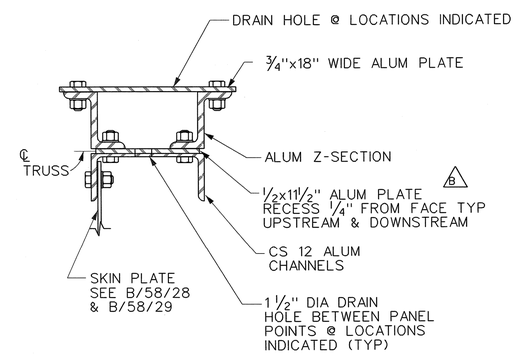

SECTION G
SCALE: 1 1/2" = 1'-0"
58/26
58/27

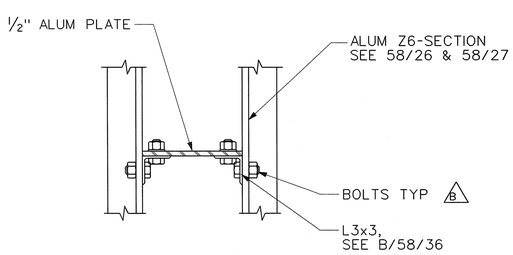

SECTION F
SCALE: 1 1/2" = 1'-0"
58/36

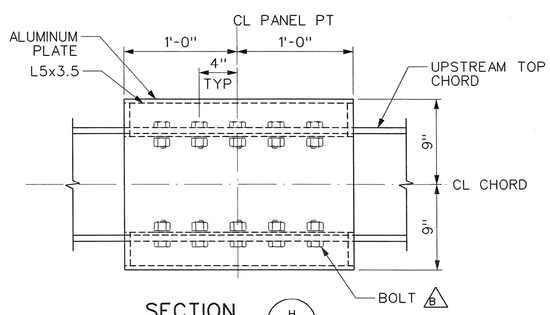

SECTION H
SCALE: 1 1/2" = 1'-0"
58/36

1' 6" 0 1'
SCALE: 1-1/2'' = 1'-0"

This document was originally issued by David A. Brittain on 15 July 2005. This document is not considered a sealed document. An original hardcopy signed and sealed document is on file with the U.S. Army Corps of Engineers, Pittsburgh District.

US Army Corps of Engineers Pittsburgh District

Submitted by: /s/ David A. Brittain, SECTION CHIEF
IFB NO.: W911WN-05-B-0002
Sheet 23 of 30

Design by: CVP
Dwn by: JAH
Ckd by: CDS
Submission Date: 17 JUNE 05
Revision Date:

DLZ
6121 Huntley Road, Columbus, Ohio 43229
User: 7177
Date: 7/14/2005
Plot Scale: AS SHOWN
Pen Table: 291106i.tbl
Color Table color.tbl

Symbol	Description	Date	Appr.
B	CLARIFIED PLATE WIDTH AT UPSTREAM CHORD.	15 JUL 05	DAB
A	REVISED BOLT MATERIAL CLARIFIED SECTION C. REVISED SECTION"B" AND "C". ADDED SECTION "C".	17 JUN 05	DAB

M:\proj\0421\1501.13\dgn\Structural\OLEM_S-5836b.S01

OHIO RIVER
EMSWORTH DAMS
FABRICATION OF EMERGENCY BULKHEADS
EMERGENCY BULKHEADS
MISC. DETAILS

Drawing Number: O-LEM-58/36.2

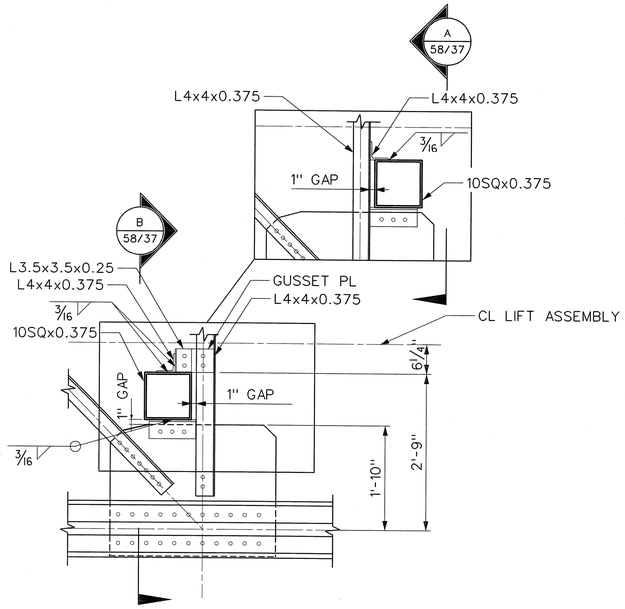

DETAIL 1 58/27
SCALE: ¾" = 1'-0"

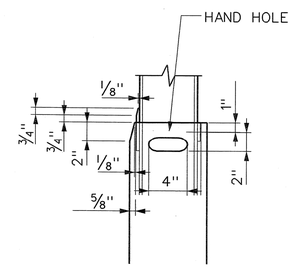

DETAIL 2 58/37 A
SCALE: 1½" = 1'-0"

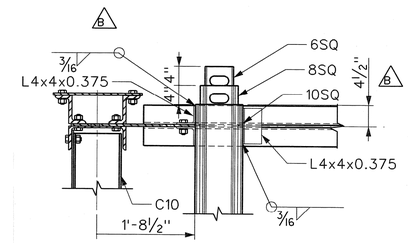

SECTION A 58/37
SCALE: ¾" = 1'-0"

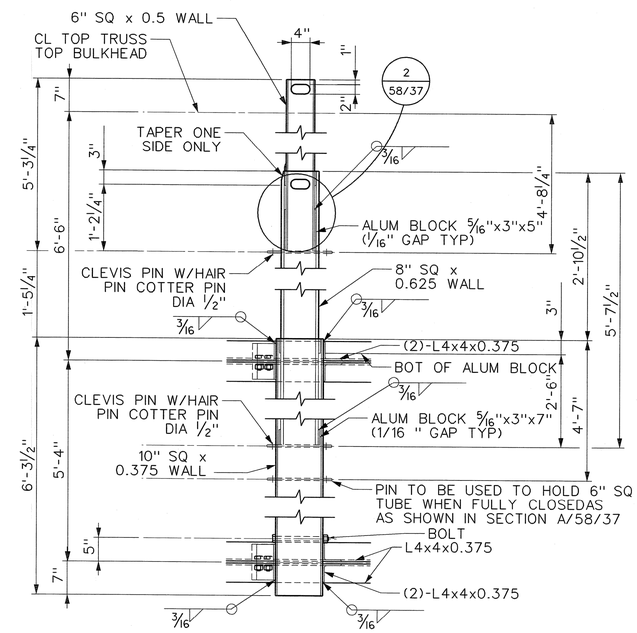

SECTION B 58/37 A B
SCALE: ¾" = 1'-0"

1' 6" 0 1' 2' 3'
SCALE: ¾'' = 1'-0"

1' 6" 0 1'
SCALE: 1-1/2'' = 1'-0"

This document was originally issued by David A. Brittain on 15 July 2005. This document is not considered a sealed document. An original hardcopy signed and sealed document is on file with the U.S. Army Corps of Engineers, Pittsburgh District.

US Army Corps of Engineers
Pittsburgh District

Submitted by: /s/ David A. Brittain
SECTION CHIEF

FB NO.: W911WN-05-B-0002

Sheet 24 of 30

Design by: CVP
Dwn by: JAH
Ckd by: CDS
Submission Date: 17 JUNE 05
Revision Date:

DLZ
6121 Huntley Road, Columbus, Ohio 43229

User: DLZ
Date: 7/14/2005
Plot Scale: AS SHOWN
Pen Table: 291061.tbl
Color Table color.tbl

Symbol	Description	Date	Appr.
B	REVISED DIMENSIONS.	15 JUL 05	DAB
A	REVISED HANDHOLE.	17 JUN 05	DAB

M:\proj\0421\1501.13\dgn\Structural\OLEM_S-5837b.s01

OHIO RIVER
EMSWORTH DAMS
FABRICATION OF EMERGENCY BULKHEADS
EMERGENCY BULKHEADS
SECTIONS & DETAILS
GUIDE BEAM

Drawing Number:
O-LEM-58/37.2

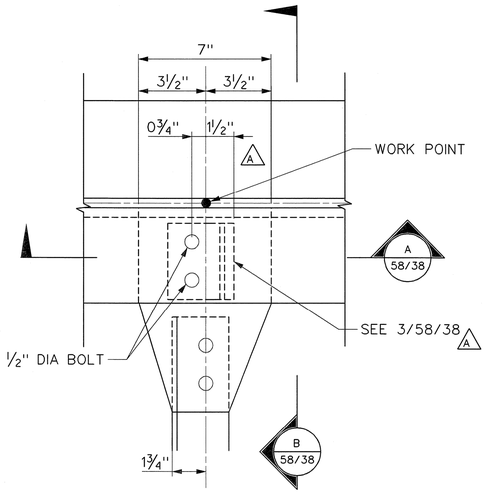

DETAIL 1 A
SCALE: 3" = 1'-0"
58/28
58/29

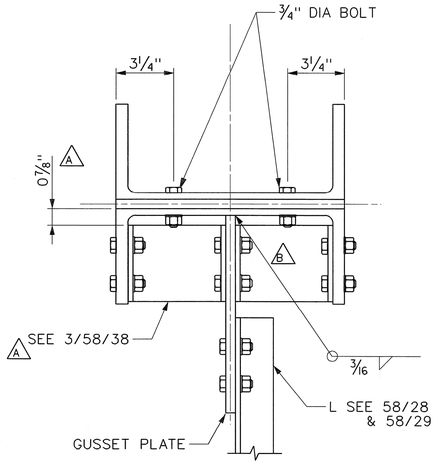

SECTION B
SCALE: 3 " = 1'-0" 58/38

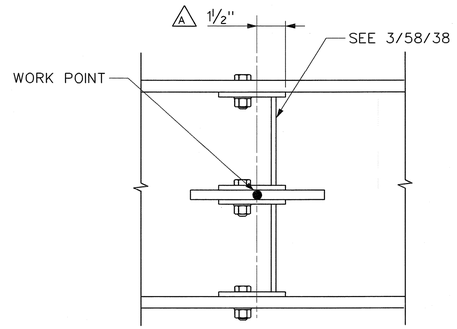

SECTION A
SCALE: 3 " = 1'-0" 58/38

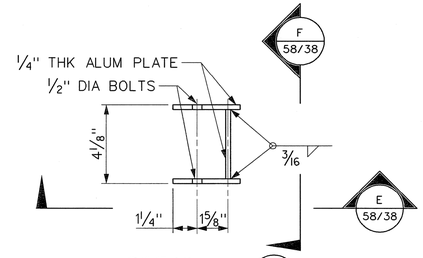

DETAIL 3 A
SCALE: 3" = 1'-0"
58/38, 58/39
58/40, 58/41
58/42

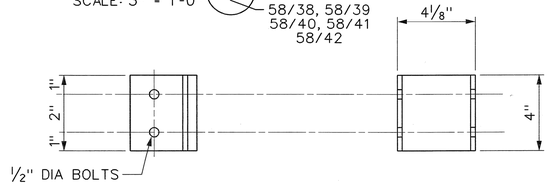

SECTION E A
SCALE: 3" = 1'-0" 58/38

SECTION F A
SCALE: 3" = 1'-0" 58/38

This document was originally issued by David A. Brittain on 15 July 2005. This document is not considered a sealed document. An original hardcopy signed and sealed document is on file with the U.S. Army Corps of Engineers, Pittsburgh District.

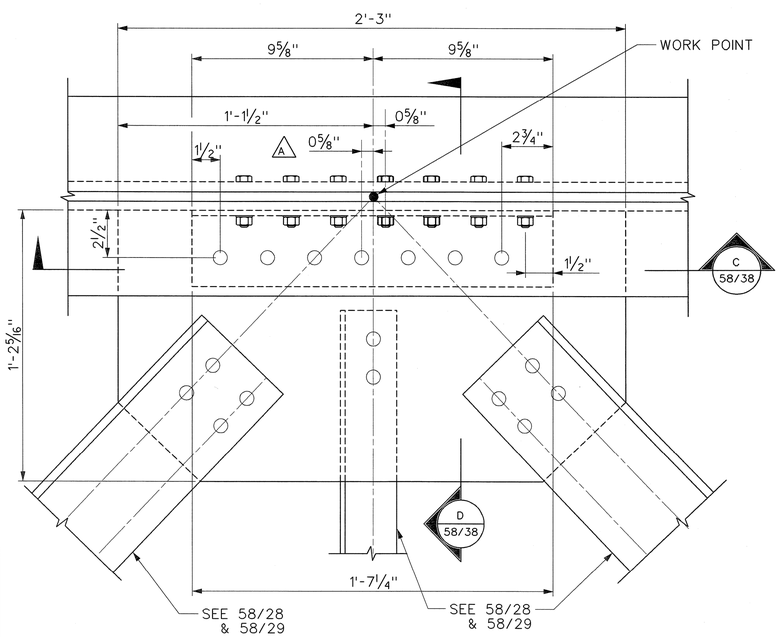

DETAIL 2 A
SCALE: 3" = 1'-0"
58/28
58/29

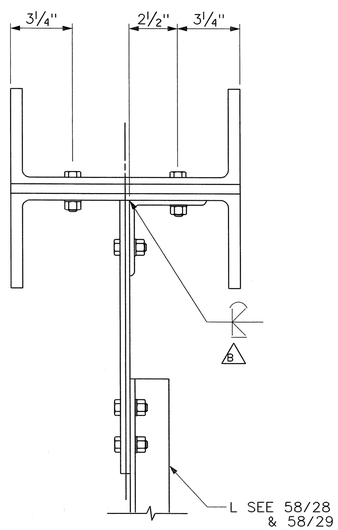

SECTION D
SCALE: 3 " = 1'-0" 58/38

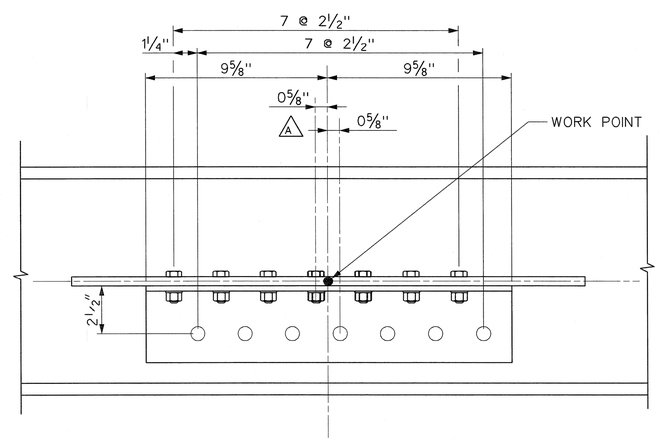

SECTION C
SCALE: 3 " = 1'-0" 58/38

1' 6" 0 1'
SCALE: 3'' = 1'-0''

US Army Corps of Engineers
Pittsburgh District

Submitted by: /s/ David A. Brittain SECTION CHIEF
IFB NO.: W911WN-05-B-0002
Sheet 25 of 30

Design by: CVP
Own by: JAH
Ckd by: CDS
Submission Date: 17 JUNE 05
Revision Date:

DLZ
612 Lakeway, Roads, Columbus, Ohio 43229
User: 7714/2005
Date: 7/14/2005
Plot Scale: AS SHOWN
Pen Table: 291061.tbl
Color Table color.tbl

Symbol	Description	Date	Appr.
B	CLARIFIED WELD AT SECTIONS B & D.	15 JUL 05	DAB
A	ADDITIONAL REFERENCES TO OTHER SHEETS.	17 JUN 05	DAB
	ADDED SECTIONS E & F, DETAIL 3 AND CHANGED DIMENSIONS IN SECTIONS A, B & C AND DETAILS 1 & 2		

M:\proj\0421\1501.13\dgn\Structural\OLEM_S-5838b.s01

OHIO RIVER
EMSWORTH DAMS
FABRICATION OF EMERGENCY BULKHEADS
EMERGENCY BULKHEADS
SECTIONS & DETAILS
FRAMING CONNECTIONS 1 OF 5

Drawing Number:
O-LEM-58/38.2

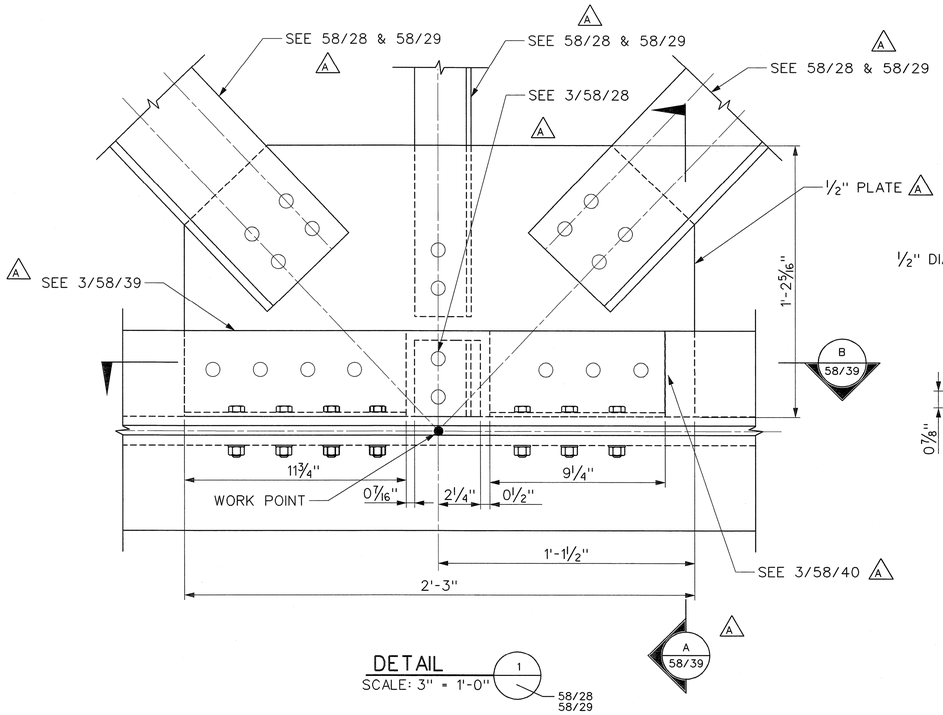

DETAIL 1 (58/28, 58/29)
SCALE: 3" = 1'-0"

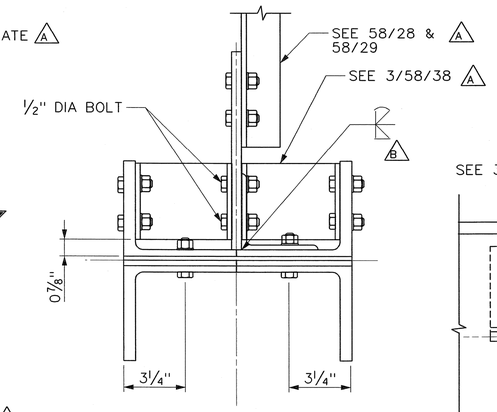

SECTION A (58/39)
SCALE: 3 " = 1'-0"

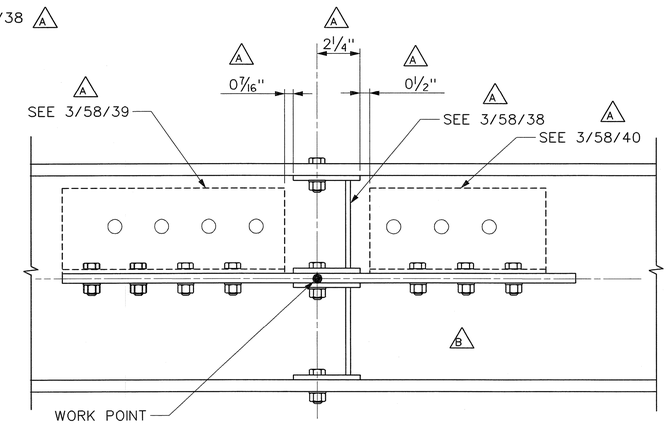

SECTION B (58/39)
SCALE: 3 " = 1'-0"

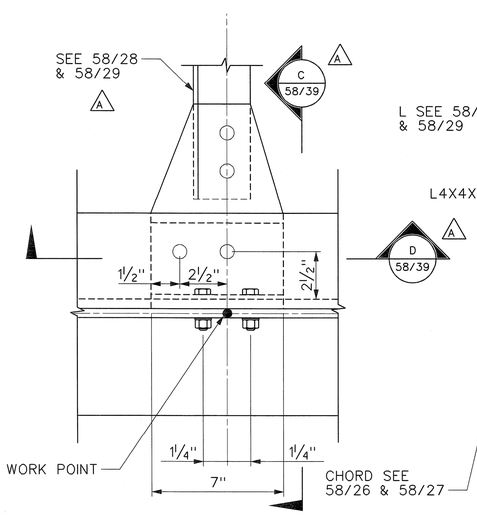

DETAIL 2 (58/28, 58/29)
SCALE: 3" = 1'-0"

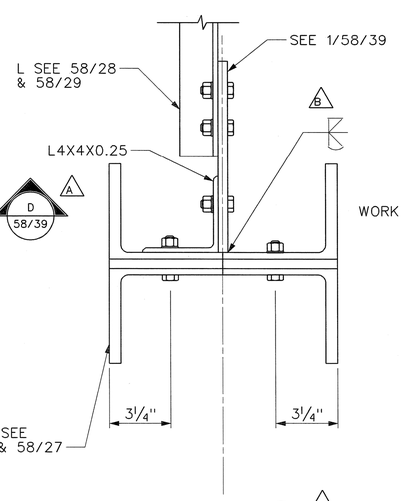

SECTION C (58/39)
SCALE: 3 " = 1'-0"

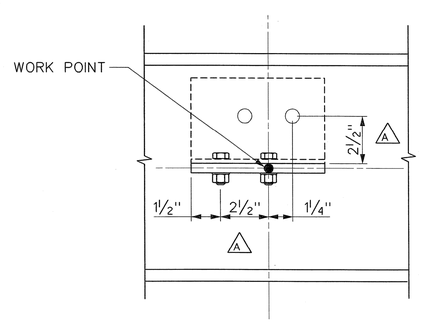

SECTION D (58/39)
SCALE: 3 " = 1'-0"

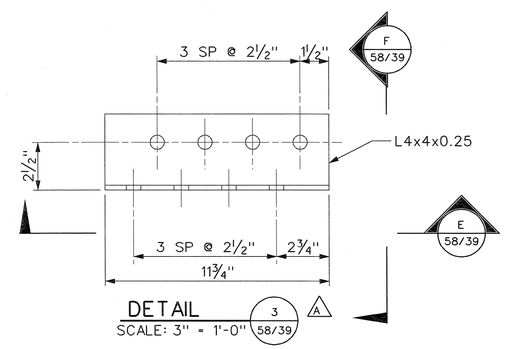

DETAIL 3 (58/39)
SCALE: 3" = 1'-0"

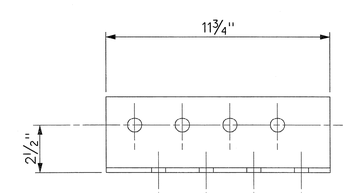

SECTION E (58/39)
SCALE: 3" = 1'-0"

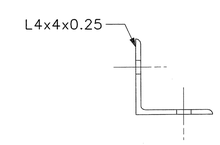

SECTION F (58/39)
SCALE: 3" = 1'-0"

1' 6" 0 1'
SCALE: 3'' = 1'-0''

US Army Corps of Engineers
Pittsburgh District

This document was originally issued by David A. Brittain on 15 July 2005. This document is not considered a sealed document. An original hardcopy signed and sealed document is on file with the U.S. Army Corps of Engineers, Pittsburgh District.

Submitted by: /s/ David A. Brittain, SECTION CHIEF
IFB NO.: W911WN-05-B-0002
Sheet 26 of 30

Design by: CVP
Ckd by: CDS
Dwn by: JAH
Submission Date: 17 JUNE 05
Revision Date:

DLZ
612 Huntley Road, Columbus, Ohio 43229
User: DLZ
Date: 7/14/2005
Plot Scale: AS SHOWN
Pen Table: 291061.tbl
Color Table color.tbl

Symbol	Description	Date	Appr.
B	WELD TYPE REVISED, WELD ADDED AT SECTION C.	15 JUL 05	DAB
A	ADDITIONAL REFERENCES TO OTHER SHEETS.	17 JUN 05	DAB
	SECTION DESIGNATIONS REVISED. ADDED DETAIL 3.		
	SECTIONS "E" & "F": SECTION D-ANGLE POSITIONING		
	REVISED.		

M:\proj\0421\1501.13\dgn\Structural\OLEM_S-5839b.s01

OHIO RIVER
EMSWORTH DAMS
FABRICATION OF EMERGENCY BULKHEADS
EMERGENCY BULKHEADS
SECTIONS & DETAILS
FRAMING CONNECTIONS 2 OF 5

Drawing Number: O-LEM-58/39.2

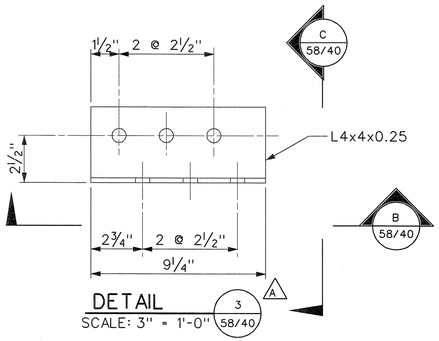

DETAIL 3/58/40
SCALE: 3" = 1'-0"

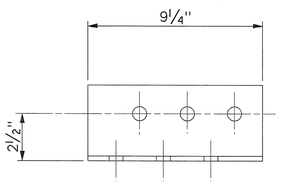

SECTION B/58/40
SCALE: 3" = 1'-0"

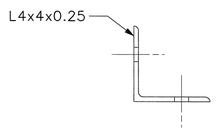

SECTION C/58/40
SCALE: 3" = 1'-0"

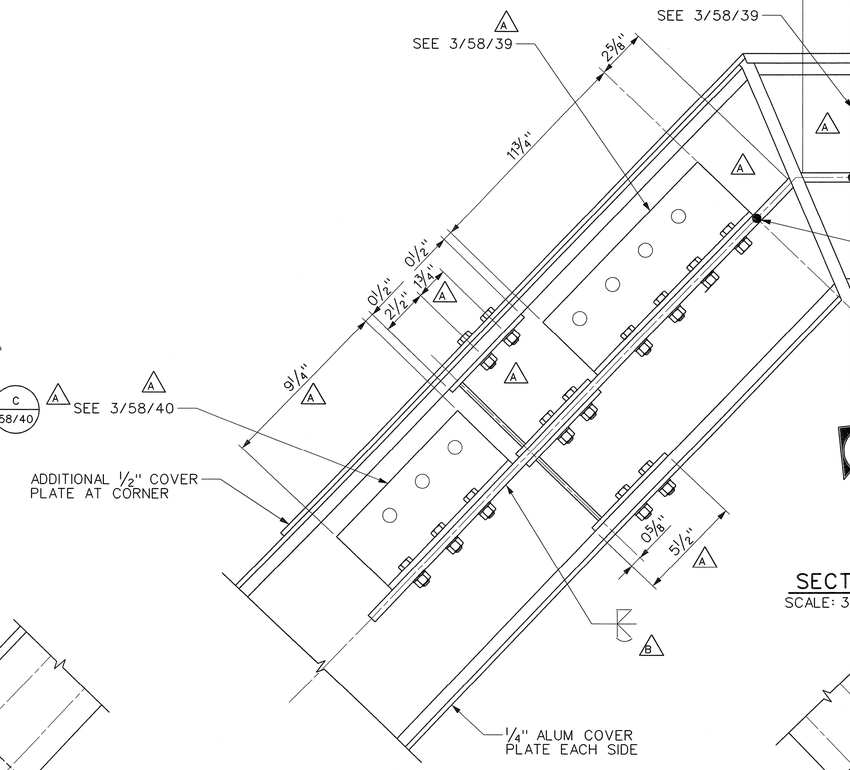

SECTION A/58/40
SCALE: 3" = 1'-0"

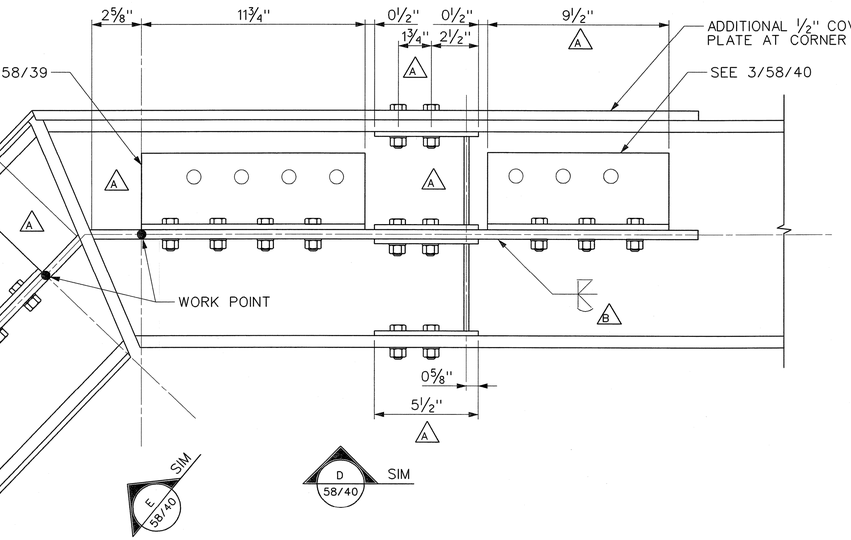

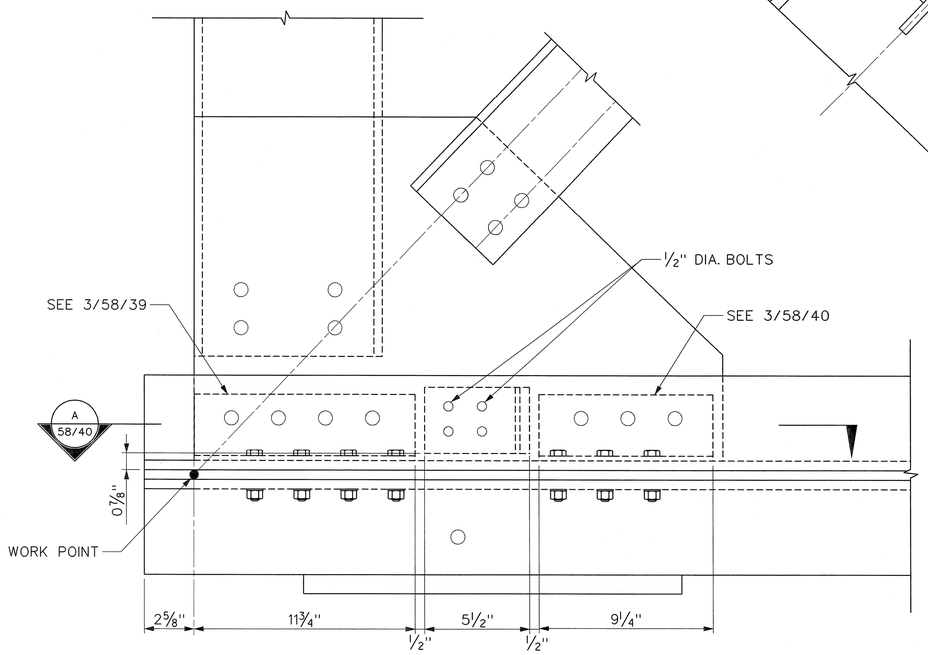

COVER PLATE NOT SHOWN FOR CLARITY

ELEVATION D/58/28 58/40
SCALE: 3" = 1'-0"

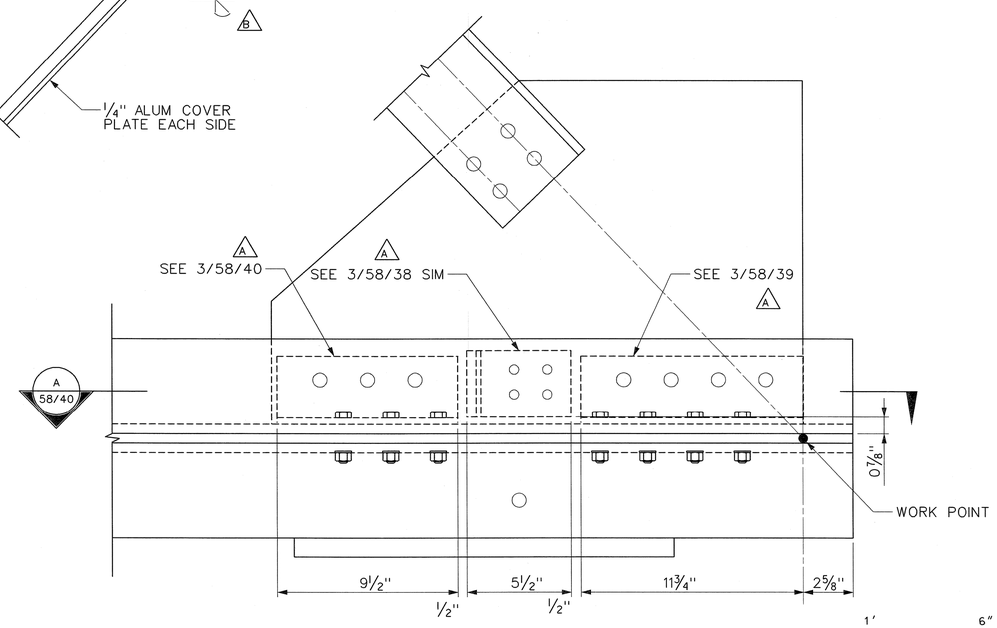

COVER PLATE NOT SHOWN FOR CLARITY

ELEVATION E/58/30 58/40
SCALE: 3" = 1'-0"

1' 6" 0 1'
SCALE: 3" = 1'-0"

This document was originally issued by David A. Brittain on 15 July 2005. This document is not considered a sealed document. An original hardcopy signed and sealed document is on file with the U.S. Army Corps of Engineers, Pittsburgh District.

US Army Corps of Engineers Pittsburgh District

Submitted by: /s/ David A. Brittain, SECTION CHIEF
IFB NO.: W911WN-05-B-0002
Sheet 27 of 30

Design by: CVP
Dwn by: JAH
Ckd by: CDS
Submission Date: 17 JUNE 05
Revision Date:

DLZ
6121 Huntley Road, Columbus, Ohio 43229
User: DLZ
Date: 7/14/2005
Plot Scale: AS SHOWN
Pen Table: 291106l.tbl
Color Table color.tbl

Symbol	Description	Date	Appr.
B	ADDITIONAL WELDS.	15 JUL 05	DAB
A	ADDITIONAL REFERENCES TO OTHER SHEETS. SECTION DESIGNATIONS REVISED. ANGLE POSITIONING IN SECTION A REVISED. BRACING REVISED. ADDED SECTIONS "B" "C" AND DETAIL 3.	17 JUN 05	DAB

M:\proj\0421\1501.13\dgn\Structural\OLEM_S-5840b.s01

OHIO RIVER
EMSWORTH DAMS
FABRICATION OF EMERGENCY BULKHEADS
EMERGENCY BULKHEADS
SECTIONS & DETAILS
FRAMING CONNECTIONS 3 OF 5

Drawing Number: O-LEM-58/40.2

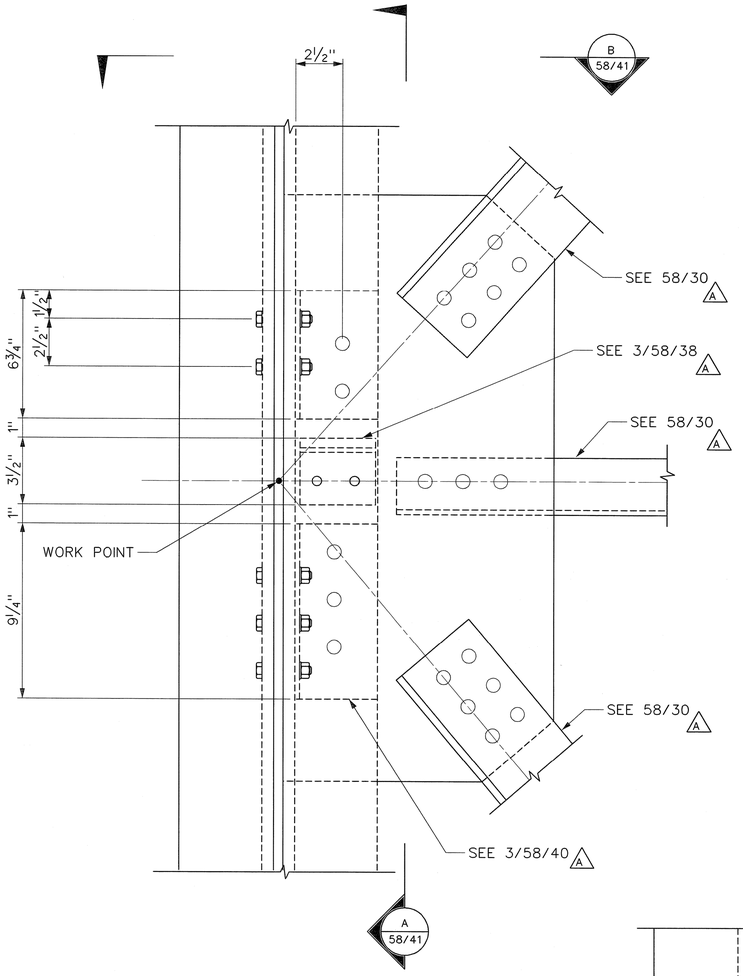

DETAIL 1 58/30
SCALE: 3" = 1'-0"

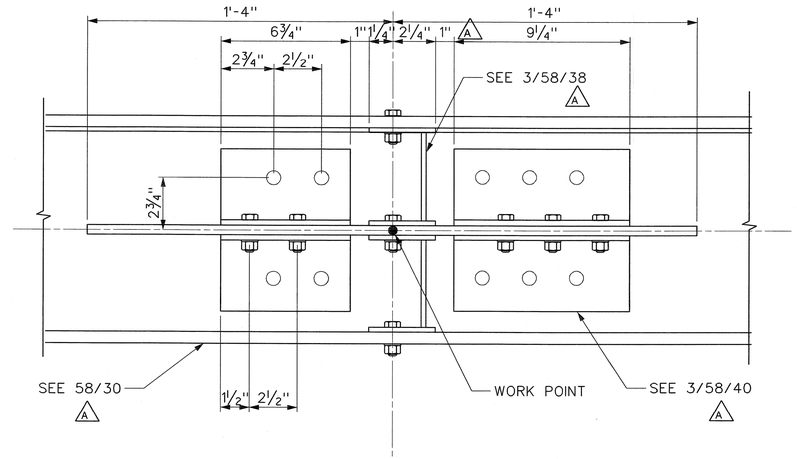

SECTION A 58/41 A
SCALE: 3" = 1'-0"

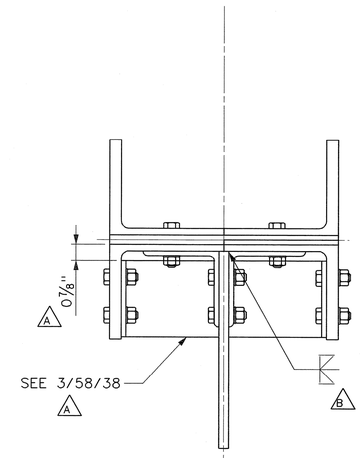

SECTION B 58/41 A
SCALE: 3" = 1'-0"

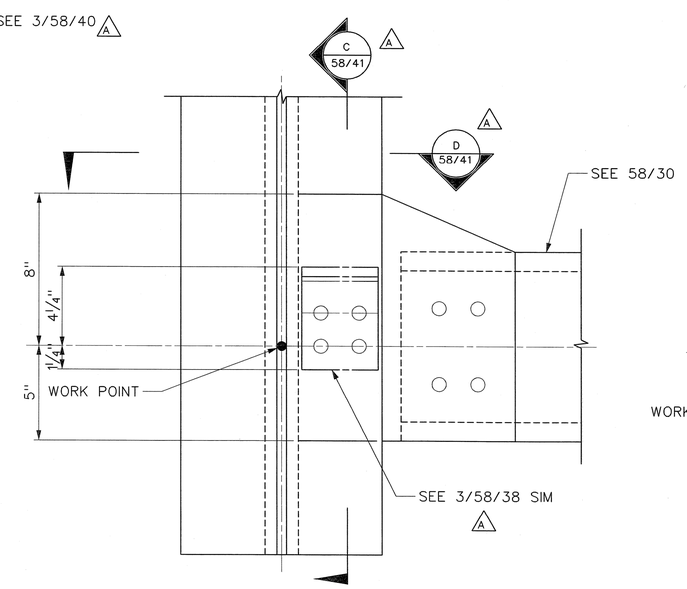

DETAIL 2 58/30
SCALE: 3" = 1'-0"

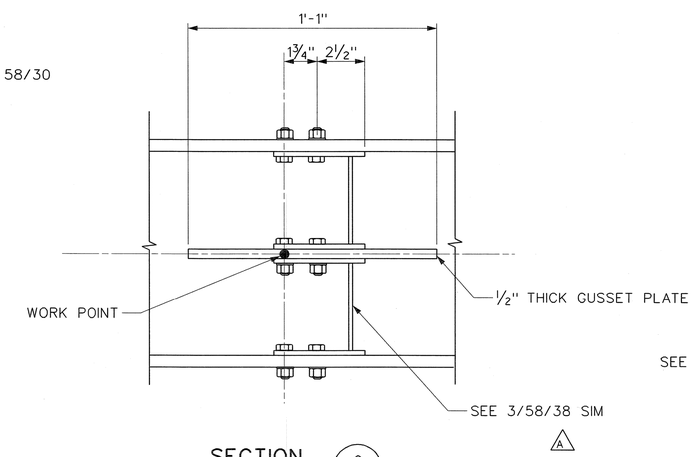

SECTION C 58/41 A
SCALE: 3" = 1'-0"

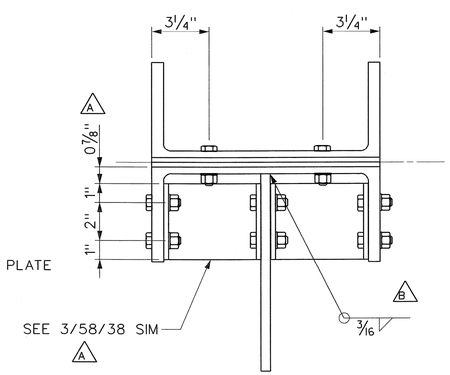

SECTION D 58/41 A
SCALE: 3" = 1'-0"

1' 6" 0 1'
SCALE: 3'' = 1'-0''

US Army Corps of Engineers
Pittsburgh District

This document was originally issued by David A. Brittain on 15 July 2005. This document is not considered a sealed document. An original hardcopy signed and sealed document is on file with the U.S. Army Corps of Engineers, Pittsburgh District.

Submitted by: /s/ David A. Brittain, SECTION CHIEF
IFB NO.: W911WN-05-B-0002
Sheet 28 of 30

Design by: CVP
Dwn by: JAH
Ckd by: CDS
Submission Date: 17 JUNE 05
Revision Date:

DLZ
6121 Huntley Road, Columbus, Ohio 43229
User: 6127
Date: 7/14/2005
Plot Scale: AS SHOWN
Pen Table: 291061.tbl
Color Table color.tbl

Symbol	Description	Date	Appr.
B	ADDITIONAL WELDS.	15 JUL 05	DAB
A	ADDITIONAL REFERENCES TO OTHER SHEETS. SECTION DESIGNATIONS REVISED. SECTIONS A,B,C & D BRACING POSITIONING REVISED.	17 JUN 05	DAB

M:\proj\0421\1501.13\dgn\Structural\OLEM_S-5841b.s01

OHIO RIVER
EMSWORTH DAMS
FABRICATION OF EMERGENCY BULKHEADS
EMERGENCY BULKHEADS
SECTIONS & DETAILS
FRAMING CONNECTIONS 4 OF 5

Drawing Number: O-LEM-58/41.2

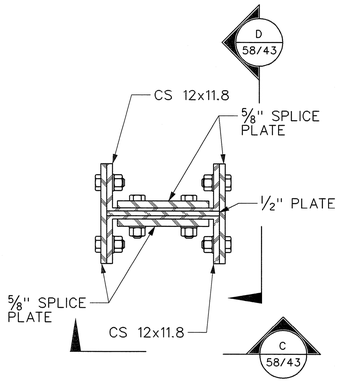

SECTION A 58/26
SCALE: 1 1/2" = 1'-0"

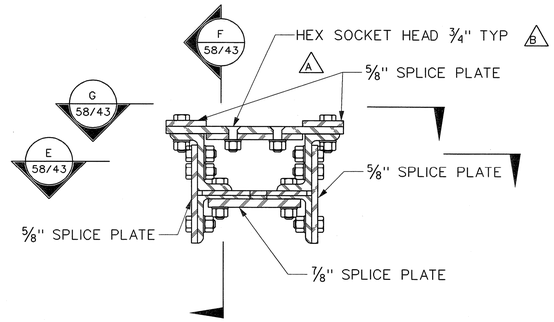

SECTION B 58/26
SCALE: 1 1/2" = 1'-0"

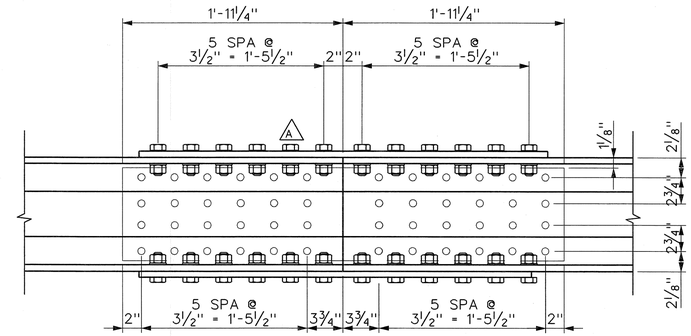

SECTION E 58/43
SCALE: 1 1/2" = 1'-0"

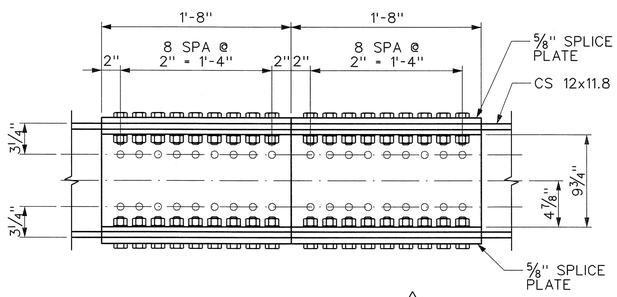

SECTION C 58/43
SCALE: 1 1/2" = 1'-0"

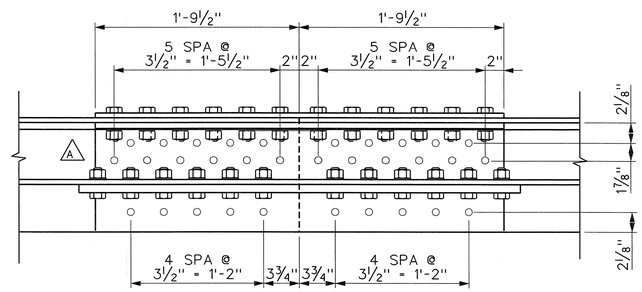

ELEVATION F 58/43
SCALE: 1 1/2" = 1'-0"

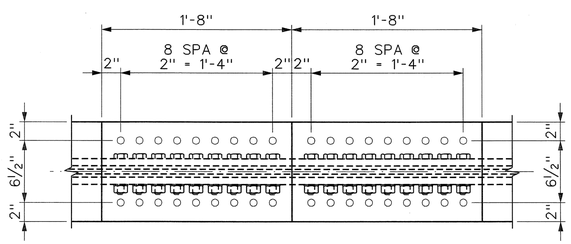

ELEVATION D 58/43
SCALE: 1 1/2" = 1'-0"

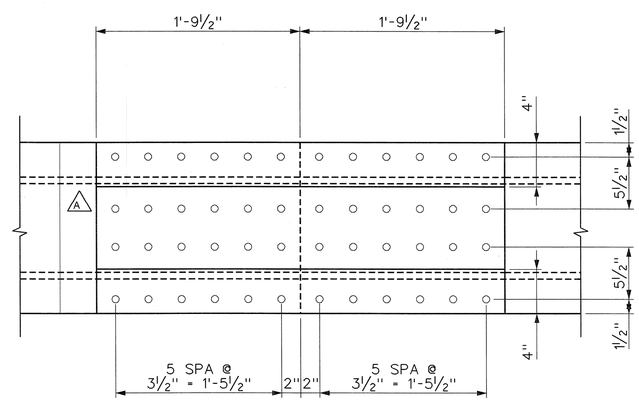

SECTION G 58/43
SCALE: 1 1/2" = 1'-0"

1' 6" 0 1'
SCALE: 1-1/2'' = 1'-0"

This document was originally issued by David A. Brittain on 15 July 2005. This document is not considered a sealed document. An original hardcopy signed and sealed document is on file with the U.S. Army Corps of Engineers, Pittsburgh District.

US Army Corps of Engineers
Pittsburgh District

Submitted by: /s/ David A. Brittain
SECTION CHIEF

IFB NO.: W911WN-05-B-0002
Sheet 30 of 30

Design by: CVP
Dwn by: JAH
Ckd by: CDS
Submission Date: 17 JUNE 05
Revision Date:

DLZ
6121 Huntley Road, Columbus, Ohio 43229
User: DLZ
Date: 7/14/2005
Plot Scale: AS SHOWN
Pen Table: 291061.tbl
Color Table color.tbl

Symbol	Description	Date	Appr.
B	BOLT TYPE REVISED.	15 JUL 05	DAB
A	REVISED DETAIL DESIGNATIONS. SECTIONS B,G & ELEVATION F-SPLICE PLATE REVISED. SECTION E & G-BOLT LOCATIONS REVISED. SECTION B- BOLT TYPE REVISED.	17 JUN 05	DAB

M:\proj\0421\15\01.13\dgn\Structural\OLEM_S-5843b.s01

OHIO RIVER
EMSWORTH DAMS
FABRICATION OF EMERGENCY BULKHEADS
EMERGENCY BULKHEADS
SECTIONS & DETAILS
SPLICE PLATES

Drawing Number:
O-LEM-58/43.2

LOCK IN SAFETY, DAM UP ACCIDENTS

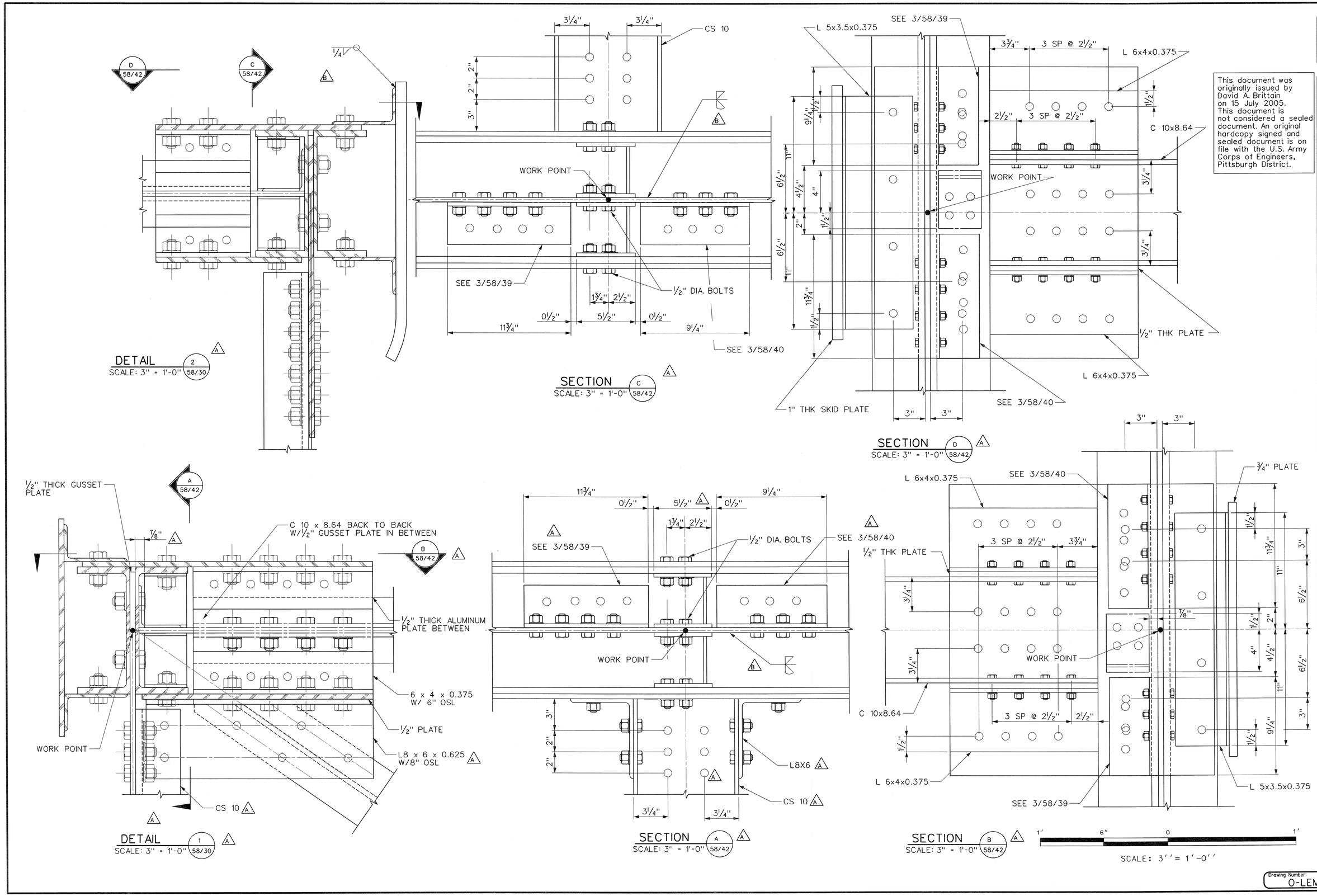

This document was originally issued by David A. Brittain on 15 July 2005. This document is not considered a sealed document. An original hardcopy signed and sealed document is on file with the U.S. Army Corps of Engineers, Pittsburgh District.

US Army Corps of Engineers Pittsburgh District

Submitted by: /s/ David A. Brittain SECTION CHIEF

IFB NO.: W911WN-05-B-0002

Sheet 29 of 30

Design by: CVP

Dwn by: JAH

Ckd by: CDS

Submission Date: 17 JUNE 05

Revision Date:

DLZ 6121 Huntley Road, Columbus, Ohio 43229

User: DLZ
Date: 7/14/2005
Plot Scale: AS SHOWN
Pen Table: 2911061.tbl
Color Table color.tbl

Symbol	Description	Date	Appr.
B	CLARIFIED SKID PLATE WELD & ADDED WELDS.	15 JUL 05	DAB
A	SECTION DESIGNATIONS REVISED. SECTION "A" BRACING POSITIONING CHANGED. DETAIL 2 AND SECTIONS B,C AND D ADDED. BOLTS IN SECTION "A" REVISED. DETAIL 1 ANGLES REVISED.	17 JUN 05	DAB

M:\proj\0421\1501.13\dgn\Structural\OLEM_S-5842b.s01

OHIO RIVER
EMSWORTH DAMS
FABRICATION OF EMERGENCY BULKHEADS
EMERGENCY BULKHEAD
SECTIONS & DETAILS
FRAMING CONNECTIONS 5 OF 5

Drawing Number: O-LEM-58/42.2